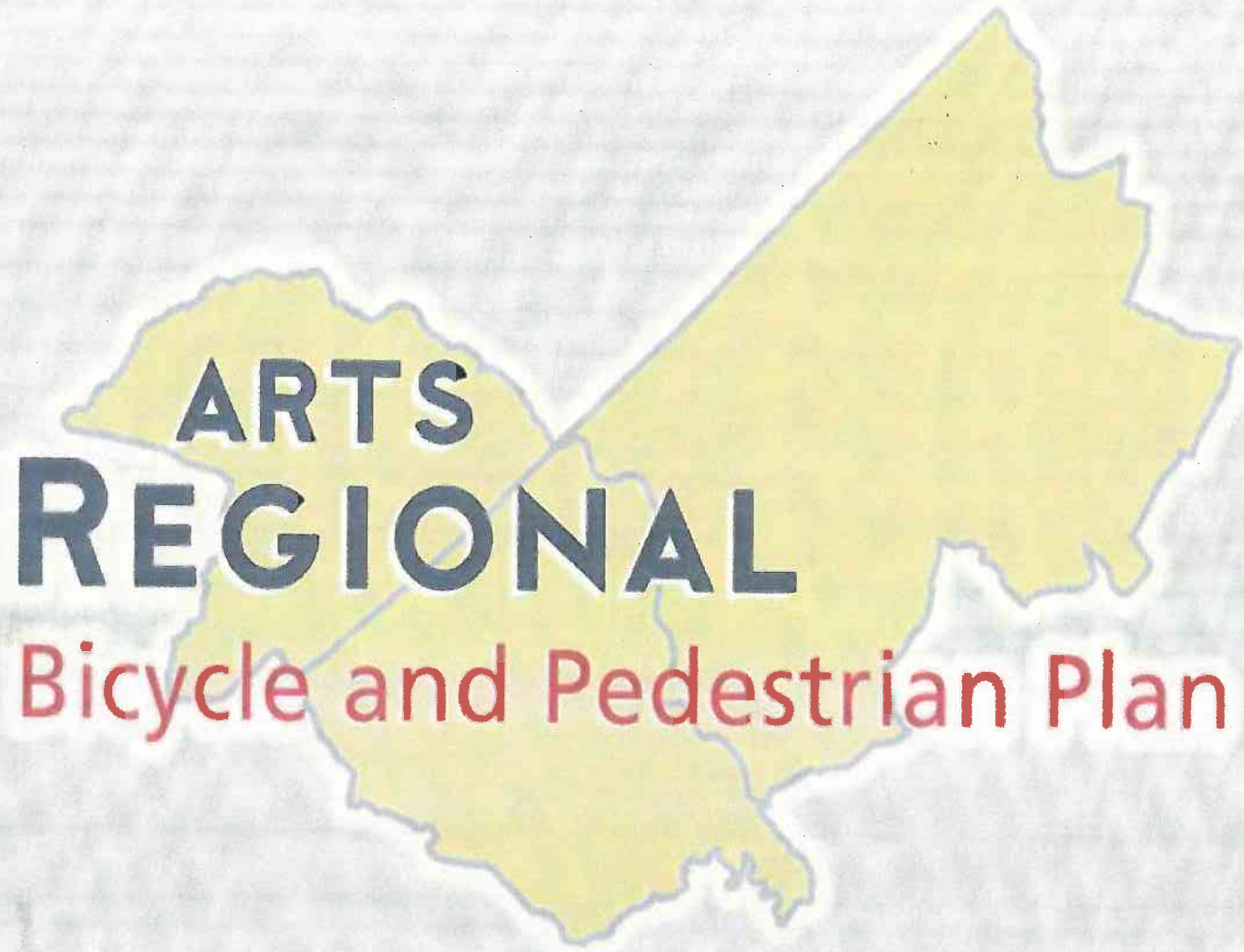

ARTS REGIONAL Bicycle and Pedestrian Plan

AUGUSTA REGIONAL
TRANSPORTATION STUDY

BICYCLE AND PEDESTRIAN PLAN

ARCADIS

January 2003

ARTS Regional Bicycle and Pedestrian Plan

Prepared for:
August-Richmond County
Planning Commission

Prepared by:
ARCADIS G&M, Inc.
2849 Paces Ferry Road
Suite 400
Atlanta
Georgia 30339
Tel 770 431 8666
Fax 770 435 2666

Our Ref.:
GA063192/Rpt 1670

Date:
21 October 2003

The contents of this report reflect the views of the persons who prepared the document and those individuals are responsible for the facts and the accuracy of the data presented herein. The contents of this report do not reflect the views or policies of the Georgia Department of Transportation, the South Carolina Department of Transportation, the Federal Highway Administration, or the Federal Transit Administration. This report does not constitute a standard, specification, or regulation.

Table of Contents

1. Introduction 1

1.1 Federal Guidance 1

1.2 Bicycling and Walking Benefits 3

1.3 Plan Development 3

2. Planning Process 5

2.1 Overview 5

2.2 Public Involvement 5

2.2.1 Agency Coordination 6

2.2.2 Community Involvement 6

2.2.3 Community Outreach 12

2.2.4 Public Involvement Evaluation 13

2.3 Goals and Objectives 13

2.4 Project Evaluation and Selection Process 15

2.4.1 Evaluation Criteria 15

2.4.2 Site Review 17

3. Existing Conditions 19

3.1 Socioeconomic Conditions 19

3.2 Local and Regional Planning Plans and Projects 20

3.2.1 Augusta Regional Transportation Study Bikeway Plan 20

3.2.2 ARTS Long-Range Transportation Plan (LRP) 21

3.2.3 Supporting Local and Regional Planning Activities 22

3.3 State Plans and Programs 26

3.3.1 Georgia 26

3.3.2 South Carolina 27

3.4 Regional Organizations 27

3.4.1 Safe Communities 27

Table of Contents

3.5	Transit Service		28
	3.5.1	Aiken County Transit	28
	3.5.2	Augusta Public Transit	28
4.	**Bicycle and Pedestrian Design Guidelines**		**29**
4.1	Existing Standards and Guidelines		29
	4.1.1	Local	29
	4.1.2	State Guidelines and Standards	30
	4.1.3	Federal	30
4.2	Facility Users		31
	4.2.1	Bicycle Users	31
	4.2.2	Pedestrian Users	32
4.3	Recommended Minimum Design Guidelines		33
	4.3.1	Pedestrian Facilities	33
	4.3.2	Bicycle Facilities	38
	4.3.3	Multiuse Facilities	41
4.4	Supporting Facilities Design Recommendations		43
5.	**Implementation Strategies**		**45**
5.1	Bicycle and Pedestrian Program Recommendations		45
	5.1.1	Educational Programs	45
	5.1.2	Safety Programs	46
	5.1.3	Enforcement Programs	48
5.2	Design and Maintenance Recommendations		49
5.3	Multimodal Connection Recommendations		50
5.4	Land Use Recommendations		51
5.5	Funding Policies and Recommendations		54
	5.5.1	Low-Cost Funding Strategies	55
5.6	Regional Agency Coordination Recommendations		55

Table of Contents

	5.6.1	Application Process	55
	5.6.2	Steering Committee	55
5.7	Performance Measures		57
	5.7.1	Data Collection Needs	58
5.8	Recommendations		58
	.8.1	Education	59
	5.8.2	Safety	60
	5.8.3	Enforcement	60
	5.8.4	Design and Maintenance	60
	5.8.5	Multimodal Connections	60
	5.8.6	Land Use Policy	61
	5.8.7	Funding	61
	5.8.8	Agency Coordination	62
	5.8.9	Evaluation of Network	62
6.	**Projects**		**63**
6.1	Project Funding Summary		63

Tables

1	Pedestrian Facility Type Costs	38
2	Bicycle Facility Type Costs	41
3	Multiuse Facility Type Costs	43
4	Cost Summary	63
5	Costs by Jurisdiction	64
6	Recommended Bicycle Projects	65

Table of Contents

Figures

1	Traffic Generators
2	Current Population and Employment
3	Future Population and Employment

Appendices

A	Public Involvement
B	Project Evaluation Sheets
C	Local and Regional Planning Activies
D	Funding Sources

1. Introduction

The Augusta-Richmond County Planning Commission is the federally mandated metropolitan planning organization (MPO) for the urbanized areas of Aiken, Columbia, and Richmond counties. As the MPO, the planning commission administers the transportation planning process for the region, which is called the Augusta Regional Transportation Study (ARTS). ARTS administers a long-range regional transportation plan that is updated every five years and a short-range transportation improvement program, which is updated yearly. Federal funding of projects is contingent upon plans and programs meeting federal standards for a comprehensive, coordinated, and continuous planning process. Funding partners for ARTS include the Georgia and South Carolina Departments of Transportation and the Aiken County Planning and Development Department. Planning partners include Aiken County Planning, Aiken Transit, Augusta-Richmond County Planning Commission, Augusta Public Transit, and Columbia County.

ARTS addresses all modes of transportation, including bicycling and walking. A specific bikeway plan was created in 1994 and updated in 1997, however it did not include a pedestrian element. The Federal Highway Administration (FHWA) recommended that ARTS develop both a bicycle and pedestrian plan to guide future transportation investments.

In April 2002, ARCADIS was contracted to develop a regional bicycle and pedestrian plan for the ARTS study area including a review of bicycle and pedestrian facilities, development of community-based goals and objectives, identification of existing conditions and routes, and development of a methodology to create a network based on regional needs and desires. This plan also includes specific implementation policies and strategies, in addition to a schedule of projects with cost estimates and funding opportunities.

1.1 Federal Guidance

Specific federal guidance has been created to assist MPOs in planning for bicycle and pedestrian mobility and accessibility. The latest guidance on bicycle and pedestrian provisions of the federal aid program was issued February 24, 1999. The following are the recommended elements for a statewide or regional bicycle and pedestrian element of a long-range plan.

1. Vision and goal statements, and network performance criteria
2. Assessment of current conditions and needs
3. Identification of activities required to meet the vision and goals developed
4. Implementation of bicycle and pedestrian elements in the Long-Range Transportation Plan and Transportation Improvement Program
5. Evaluation of progress
6. Public involvement

The federal guidance strongly encourages bicycle and pedestrian facilities to become the norm rather than the exception in planning, developing, and constructing a transportation system. Each project funded with federal funds should include bicycle and pedestrian facilities, unless they are not permitted. Federal guidance further states that an alternative route on parallel surface streets should be identified and implemented where bicycle and pedestrian uses are either prohibited or made incompatible.

The federal guidance outlines many simple and cost-effective ways to integrate nonmotorized users into the design and operation of the transportation system. The methods include:

- Providing paved shoulders on new and reconstructed roads
- Restriping roads (either as a standalone project or after a resurfacing or reconstruction project) to create a wider outside lane or striped bike lane
- Building sidewalks and trails, and requiring new transit vehicles to have bicycle racks and/or hooks already installed

Additionally, it is likely that the Aiken-Augusta metropolitan area will be designated as a nonattainment area for air quality under the eight-hour air quality standard. With this designation, ARTS will face additional federal requirements including the consideration and/or funding of alternate transportation modes. A key component of this plan update is the identification of projects that will aid the MPO in meeting air quality standards in the future.

1.2 Bicycling and Walking Benefits

Beyond federal mandates, there is a growing realization that bicycling and walking are viable and healthy transportation options. Increasing air pollution and automobile congestion are inducing citizens to request alternate modes of transportation.

There are a variety of benefits associated with the promotion of bicycle and pedestrian use, including reduced financial strains on public facilities, healthier citizens, increased economic benefits, and improved quality of life. Research has shown that even low to moderate levels of exercise, such as regular bicycling or walking, can result in significant benefits to the health and physical fitness of participating individuals.

Replacing car trips with bicycling or walking trips can also lead to significant environmental benefits, including reduced levels of ozone and carbon monoxide. Another added benefit is that this helps a community to meet air quality standards required under the 1990 Clean Air Act Amendments.

Safe and attractive facilities offer additional travel options for those not able to drive or those who choose not to drive for all trips. This can result in less demand for vehicular facilities, thereby reducing congestion and contributing to reduced financial cost associated with maintaining facilities.

1.3 Plan Development

To meet the needs of the region and to comply with federal guidance, this plan consists of the following sections:

Planning Process – Provides an overview of the public involvement program that led to the development of community-based goals and objectives and project evaluation criteria.

Existing Conditions Analysis – Includes an inventory and analysis of existing conditions and plans/policies that impact the development and implementation of a regional bicycle and pedestrian network.

Design Standards – Provides suggested minimum standards for bicycle and pedestrian facilities with unit costs associated with each of the different facilities.

Implementation Strategies – Includes a description of recommended programs and policies to further bicycle and pedestrian mobility and methods for ongoing evaluation of the regional system.

Project Identification – Includes project descriptions, mapping, and cost estimates for proposed bicycle facilities. Funding and project types are also included for pedestrian facilities.

2. Planning Process

2.1 Overview

The end result of this plan is the identification and selection of bicycle and pedestrian projects, policies, and programs that support a regional bicycle and pedestrian system. Public involvement, a regional bicycle/pedestrian steering committee, and agency participation were the primary vehicles for the development of a community-supported plan that identified common goals and objectives and evaluation criteria for the identification and selection of projects. As an added component of the plan process, performance measures were developed to evaluate the success of the bicycle and pedestrian system over time. The following section describes the public involvement and evaluation process. Section 3 includes a review of existing conditions. (Recommendations and projects are included in Sections 4 and 5.)

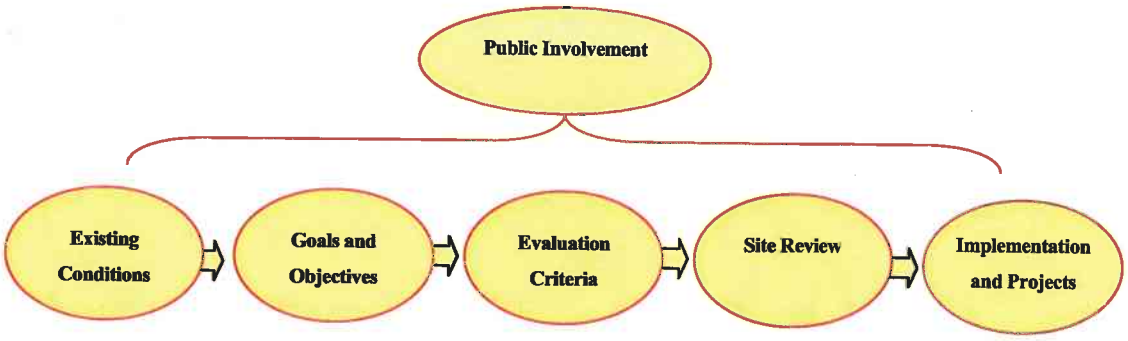

2.2 Public Involvement

Public involvement is not only mandated by federal regulations in the use of federal funds, but is essential for the completion of a successful plan. Involving the public in the decision-making process helps create a community-supported vision with an understanding of the needs and constraints of the existing network. No matter how technically sound a planning document is, without the support of the public, it is destined to sit on the shelf. Bicycle and pedestrian plans face a challenge regarding public involvement. Although there is a growing awareness of the benefits of walking and biking, use of these forms for transportation is still not widespread, therefore, interest in planning and funding these facilities may be lower than for roadway and/or transit projects. The following is a description of the public involvement activities undertaken to develop an open bicycle and pedestrian planning process, including agency coordination, community involvement, and outreach.

2.2.1 Agency Coordination

Agency coordination provided the guidance necessary to ensure that the public involvement program was tailored not only to current users in the region, but also to potential users such as the elderly and children. Local governments assisted in developing outreach tools to inform and engage the community in the public discussion of this study through a variety of existing activities and several opportunities for direct involvement of the public.

2.2.1.1 Citizen Advisory Committee

The CAC is an ARTS committee that provides guidance by ensuring that public input is an integral aspect of the planning processes. The CAC reviewed the proposed activities for the public involvement program and received periodic summaries of the plan process.

2.2.1.2 Technical Coordinating Committee

The TCC, consisting of transportation engineers, planners, and managers from the federal, state, and local levels, provided guidance throughout the planning process. TCC representatives participated in seven team meetings and attended each of the steering committee and community meetings.

2.2.1.3 Policy Committee

The ARTS Policy Committee, consisting of local elected officials, representatives of the Georgia and South Carolina Departments of Transportation, representatives of the Federal Highway Administration and Federal Transit Administration, the ARTS project director, and the chairperson of the CAC, were provided updates throughout the planning process.

2.2.2 Community Involvement

2.2.2.1 Regional Bicycle and Pedestrian Steering Committee

A bicycle and pedestrian steering committee, consisting of local government representatives, nonprofit representatives, state bicycle coordinators, and private sector organizations, provided valuable input on the plan. Steering committee members participated in five facilitated meetings and several take-home assignments over the course of the study and largely guided the development of goals and objectives, identification of issues and

opportunities, project evaluation criteria, project identification, and the refinement of performance standards.

2.2.2.1.1 Issues and Opportunities

The first steering committee assignment was the identification of bicycle and pedestrian issues and opportunities for the region. Steering committee members recognized the following social, physical, economic, and political conditions.

Social

Issues	Opportunities
Citizens don't understand the value of bike paths to the community	Opportunity to promote bicycle and pedestrian use for short distance trips
Government and others need to believe in the plan (not doubt its importance)	Improve quality of life (build it and they will come)
Lack of buy-in from the community	Educational opportunities (i.e., National Science Center)
Perceived lack of safety on trails (no lights, perceived crime, conflicts between pedestrians and cyclists)	Exercise; take advantage of the outdoors

Economic/Financial

Issues	Opportunities
Need to show physical results to get more support for funding	Use existing facilities more wisely
Local match money	Local match money
Additional funding sources	Additional funding sources
	Connected network will bring more money to neighboring communities
	Promotes economic development – ecotourism
	Choose an initial project that will be successful
	Greenspace program
	Georgia motor fuel tax
	Private funding
	Utilitarian purpose – not a frill

Physical

Issues	Opportunities
Community connection	Community connection
Roads that prohibit connectivity; lack of linkages and inability to cross county lines	Georgia Power easement
Savannah River	Savannah River
Augusta Canal	Augusta Canal
Property acquisition	Greenspace/floodplain property
Bridges – current widths do not accommodate bicyclists and pedestrians	Building them wider for all users
There are no natural corridors for multiuse facilities in Aiken County	Warren Road widening
Rumble strips	Rumble strips
	Pedestrian bridges
	Piggybacking onto plans that are already under development
	Abandoned railroad right-of-way
	Sewer line easements
	Redesigning bypass and Whisky Road Corridor
	5th Street Bridge and the Gordon Highway Bridge – one can accommodate vehicles while the other can be used by cyclists and pedestrians

Policy/Political

Issues	Opportunities
Support from politicians and citizens (mentality of the community)	Support from politicians and citizens (mentality of the community)
Third-lowest gas tax in country (SC)	Gas tax (GA)
Bureaucratic red tape	Take advantage of what other cities have done
	SCDOT policy of bicycle and pedestrian facilities

In addition, steering committee members participated in a "photo inventory." This assignment was used to highlight where facilities were used or needed in the region, as well as demonstrate to steering committee members the need for additional facilities. Several of the photos from this assignment are displayed in this section. Appendix A includes a complete list of photos and their locations.

Banks Mill bike path, Aiken County

2.2.2.1.2 Project Evaluation and Selection

Steering committee members also provided valuable input regarding project types that would achieve a regionally coordinated system. Through facilitated meetings, the steering committee indicated that the following types of projects should be prioritized above others:

- Cross jurisdictional boundaries
- Close gaps in the existing system
- Are based on local planning efforts
- Promote safety, use of alternate modes of transportation, and regional awareness

The steering committee also evaluated a draft project list and identified those projects that should be included in the plan.

2.2.2.2 Aiken Bicycle Club

In addition to being represented on the Bicycle and Pedestrian Steering Committee, the Aiken Bicycle Club provided additional guidance related to suitable bicycle routes and design criteria for the city of Aiken. A night meeting was held October 24, 2002, at the Odell Weeks Recreation Center to facilitate their involvement.

2.2.2.3 Community Meetings

Public meetings were a critical and necessary mechanism for involving the general public in the planning process. Community meetings were held at key points during the planning process to solicit valuable input.

The first set of community meetings for the ARTS Bicycle and Pedestrian Plan update was held July 9, 2002, in two locations: the Aiken Municipal Conference Center and the Augusta-Richmond County Municipal Building. Fifty-one community members participated at these meetings.

Eisenhower Park next to River Watch and near canal towpath, Richmond County

The goals of the meetings were to:

1. Educate the community about the Bicycle and Pedestrian Plan update
2. Gather input on issues and perceived problems in the bicycle and pedestrian system
3. Identify origins and destinations
4. Identify preliminary criteria for project evaluation

Augusta River Walk, Richmond County

In general, community participants indicated the following as deterrents to a regional network of bicycle and pedestrian facilities. This information was used to refine the list of regional issues and opportunities.

- Attitude
- Funding
- Development patterns
- Lack of existing bicycle facilities and/or sidewalks
- Safety
- Driver education

Community participants also identified destinations for bicycle users and/or pedestrians (see box), information regarding recommended bicycle and pedestrian project locations, safety issues, benefits of walking and bicycling, accessibility issues, recreation needs, and maintenance challenges, and criteria used to select a favored bicycle or pedestrian route. This information assisted the steering committee in the development of goals and objectives and the selection of evaluation criteria.

Primary Destinations

- Recreational facilities
- Schools
- Restaurants
- Entertainment facilities
- Churches
- Residential areas
- Hospitals
- Libraries
- Work sites
- Transit facilities
- Commercial areas

A second set of community meetings for the ARTS Bicycle and Pedestrian Plan update was held November 6 and 7, 2002. The meeting locations included the North Augusta Community Center (Aiken County), the Julian Smith Barbecue Pit (Richmond County), and the Savannah Rapids Pavilion (Columbia County). Thirty-nine community members participated in these meetings. The goals of the community meetings were to:

1. Educate the community about the Bicycle and Pedestrian Plan update
2. Gather input regarding goals and objectives, minimum safety design standards, programs and policies, and measures to evaluate the success of the plan in the future
3. Review proposed projects and identify missing and/or priority projects

Pedestrian at Crane Ferry Road, Richmond County

Recommended programs and policies in three categories - funding, design/maintenance, and regional programs and activities - were provided for review and comment. Community participants indicated that the financial programs or policies would be the most effective in overcoming deterrents to a regional pedestrian and bicycle network. Design/maintenance programs, including design standards and maintenance programs, were ranked second, while programs and activities, which included a regional steering committee and national programs, were ranked last. The following are additional types of bicycle and/or pedestrian programs they would like to see implemented in the region.

- Recreational
- Incentives for city employees to commute to work by bike
- Safety programs in schools and churches
- Family responsibility programs
- Public education of benefits of exercise to a healthy society and environment
- National model programs with local political support
- Regional steering committee
- Walk/bike to school day
- Sunday afternoon family bike rides
- Bike to work day

Community participants further supported funding programs by favoring financial-based performance measures.

Key routes for access from West Augusta to downtown, but unsafe for bicycling, Richmond County

Community participants also provided valuable input related to missing and priority projects, which was used to refine the project lists. Priority projects related to specific bicycle, pedestrian, multiuse, transit facility,

and geographic areas. Summaries of both rounds of community meetings are included in Appendix A.

Newly built bike path that doesn't start anywhere or go anywhere, Aiken County

2.2.3 Community Outreach

2.2.3.1 Bicycle and Pedestrian Plan Newsletter

Three newsletters highlighting opportunities for public involvement and information regarding the Bicycle and Pedestrian Plan were distributed to community and organizational groups for inclusion in their periodicals through the regional Bicycle and Pedestrian Plan Steering Committee members. The newsletters were also posted on the Bicycle and Pedestrian Plan web page (see below). The purpose of the newsletter was to raise awareness of the plan through existing community and organizational group networks. The final newsletter included a pull-out map of future bicycle corridors. It is anticipated that the Bicycle and Pedestrian Steering Committee will continue to distribute the newsletter quarterly or biannually for its own purposes.

2.2.3.2 Collateral Materials

Bookmarks highlighting the community meeting dates, web page address, and contact information were distributed throughout the community by the steering committee and the project team, and at the first community meeting. These bookmarks were designed to elicit interest in the update and provide contact information for people interested in finding out more information. Posters and fliers with community meetings dates, locations, and times were distributed throughout the community. These also provided information regarding the purpose of each meeting.

2.2.3.3 Web Site Updates

The August-Richmond Planning Commission web site was continuously updated throughout the study process with information on the planning process, a project schedule, and timely updates of the study. It is anticipated that the final Bicycle and Pedestrian Plan and each implementation success will be posted on the web page to encourage continued awareness and interest in the plan.

Family and field off Wheeler Road at Pleasant Home Road, Richmond County

2.2.3.4 Media Outreach

In order to reach the largest segment of the general public as possible, the project team provided the Augusta-Richmond staff with necessary materials for contacting the local and regional media to discuss the project and outline upcoming activities. Press releases and articles were provided to staff for distribution to the identified media outlets. Media contacts included:

- The Augusta Chronicle
- The Augusta Focus
- The Metropolitan Spirit
- The North Augusta Star
- The Aiken Standard

2.2.4 Public Involvement Evaluation

To make the most effective use of project team time and public involvement tools, meeting evaluation surveys were provided to participants at each of the stakeholder meetings and community meetings. Overall community participants indicated approval of the meetings with emphasis on the ability to provide input and interact with other stakeholders and community members. A key suggestion to improve future meetings was to include a brief introductory explanation in addition to the informational handouts.

2.3 Goals and Objectives

In 1994 the Augusta-Richmond County Planning Commission created the ARTS Bikeway Plan. As part of the planning process, several goals and objectives were developed to be addressed by the plan. Although valid goals and objectives were identified, two issues, including pedestrian needs and a long-term vision for the region, were not addressed. In addition, since the adoption of the 1994 plan, the Intermodal Surface Transportation Efficiency Act of 1991 (ISTEA) has undergone revisions, and the new federal transportation bill, the Transportation Equity Act for the 21st Century (TEA 21), contains additional planning factors and strategies related to bicycle and pedestrian issues that should be addressed by a regional bicycle and pedestrian plan. These planning factors and strategies are applicable to the ARTS region because they relate to funding sources and taking a regional approach to transportation accessibility and mobility.

Share the road sign, Aiken County

The updated plan goals and objectives build upon existing state, regional, and local bicycle and pedestrian planning efforts, and identify new mechanisms to achieve a regionally coordinated and comprehensive plan. Goals and objectives from regional and local planning initiatives, such as the 1994 Bikeway Plan, local comprehensive plans, greenspace plans, and state goals and programs provide a basis for the coordination of future efforts.

The following goals and objectives were refined through the public involvement process. They provide a foundation for the selection of projects and identification of strategies and performance measures, and guidelines for long-range plans that will assist in the achievement of a unified vision for a regionally coordinated and connected multimodal transportation system that provides educational, environmental, and economic benefits for all users.

Goal One: Provide a bicycle and pedestrian transportation network to serve local, community, and regional needs.

Objectives:

- Overcome physical barriers through governmental coordination and identification of critical linkages/connections.
- Overcome policy level barriers by facilitating changes in local development ordinances and guidelines.
- Integrate and connect to transit facilities to create regional connections for both bicyclists and pedestrians.
- Provide bicycle and pedestrian infrastructure in activity and town centers, where appropriate.
- Retrofit existing developed areas for American with Disabilities Act accessibility.
- Encourage local bicycle and pedestrian planning that complements and supports regional bicycle and pedestrian objectives.

Goal Two: Promote the viability of walking and biking as a safe and healthy transportation option throughout the region for all potential users.

Objectives:

- Support regional education, safety, and marketing programs that increase awareness and use of facilities for all users.
- Provide for ongoing regional bicycle and pedestrian coordination through a steering committee and dedicated staff time.
- Establish regionally consistent design standards for bicycle and pedestrian facilities for all users.
- Provide incentives to local employers and developers to promote bicycle and pedestrian uses.

Goal Three: Identify appropriate and adequate funding for the development and maintenance of regional and local bicycle and pedestrian systems.

Objectives:

- Ensure flexibility in federal funding to include bicycle and pedestrian projects.
- Prioritize regional projects and strategies to develop a bicycle and pedestrian network based on need and regional significance.
- Promote low-cost, easy-to-implement projects at the local and state levels (e.g., restriping, signage, bicycle racks).
- Establish requirements and standards for long-term maintenance of bicycle and pedestrian facilities

Bicycle Project Criteria

- Traffic volume
- Motor vehicle speed
- Existence of a bicycle lane
- Surface quality of route
- Existence of an off-road facility
- Distance
- Grade (topography)
- Bicycle route signage
- Number of driveways
- Bicycle parking availability
- Other (destinations, congestion, safety)
- Connection to transit facilities

2.4 Project Evaluation and Selection Process

2.4.1 Evaluation Criteria

There are many types of cyclists, ranging from experienced riders who use the bicycle as their primary form of transportation and want the most direct route to their destination to casual riders who prefer the safest route to their destination. The development of project evaluation criteria ensures that both planned projects and future projects will meet the needs of all users. Results from the steering committee meetings

and the public meetings were used to create publicly accepted bicycle and pedestrian project criteria and to assess the current planned program and existing roadway system, including those contained in the ARTS Long-Range Transportation Plan (see text boxes).

Steering committee members took this information and further refined selection criteria based on the goals and objectives. The end result was an evaluation worksheet for both bicycle and pedestrian facilities. These evaluation sheets use a weighted scale based on the following criteria. Tier one criteria receive higher scores than tiers two and three, and tier two criteria receive higher scores than tier three.

Tier One

- Interjurisdictional connectivity
- Accessibility to and within activity centers
- Accessibility to and within traffic generators
- Provides a gap closure

Tier Two

- Accessibility to transit facilities
- Lack of existing facility
- Included within a local, state, or federal plan
- Adjacency to high traffic volumes

Tier Three

- Roadway profile issues
- Right-of-way or construction easement needs
- Number of accidents

Pedestrian Project Criteria

Separation from roadway
Sidewalk condition
Traffic volume
Large truck volume
Motor vehicle speed
Crosswalks
Sidewalk pavement material
Sidewalk width
Pedestrian signals
Grade (topography)
Distance
Number of driveways
Other (shade, safety)
Connection to transit facilities

Traffic generators are areas that attract the traveling public because of their high employment numbers and/or general interest of the public and may include:

- Educational campuses
- Medical centers
- Recreation centers and parks
- Government facilities
- Shopping and entertainment areas

Activity and/or town centers are areas with more intense and mixed land uses that will foster walking and bicycling as practical transportation alternatives. For the purpose of this plan, they are defined by the density of population and employment and the ratio of jobs to housing units today and over the next 20 years, and can include:

- Commercial districts
- Neighborhoods
- Government centers

A project is given additional points according to how well it meets the individual criteria. The steering committee further recommended that project selection for short-term funding be evaluated by a regional steering committee with technical assistance from MPO staff and consultants. Please see Appendix B for the evaluation sheets.

2.4.2 Site Review

After project evaluation criteria were developed, projects were mapped with a geographic information system (GIS) using base mapping data and demographic information provided by the MPO. Site visits were performed to further evaluate the corridors for right-of-way constraints, pavement width and conditions, locations of bridges and railroad tracks, and other topographic characteristics. After corridors were reviewed, a draft list of projects with funding years was created. This list was presented for review and comment to local governments, the steering committee, and at the final public meetings. Every effort was made to ensure that proposed bicycle facilities, on road and off road, as well as pedestrian facilities were coordinated with existing and planned greenways, pedestrian corridors, planned and programmed road improvement projects, and the transit system.

3. Existing Conditions

An initial task in developing the bicycle and pedestrian plan was to analyze socioeconomic conditions that may affect existing and future needs for transportation in the area and to gather, review, and inventory existing policies, plans, ordinances, and state statues related to bicycle and pedestrian facilities. Not only was this information critical to the development of relevant policies and strategies, it helped in the identification of projects to be reviewed for inclusion into the plan and identified programs that could aid in the achievement of the goals and objectives. The following section includes:

- A brief description of relevant socioeconomic data.
- An overview of local and regional planning activities and projects.
- A review of organizations and programs that may affect bicycling and walking options within the region.

3.1 Socioeconomic Conditions

According to 2000 census data there are approximately 335,630 people within the urbanized areas of Aiken, Columbia, and Richmond counties and an additional 141,811 within the metropolitan statistical area (MSA). Among these, 300,787, or 63 percent of the MSA, are in the workforce. Approximately 13.6 percent use carpools, 3 percent walk, and less than 1 percent use bicycles or public transportation. The average commute time to work is 24 minutes. The ARTS LRP 2025 contains estimates of 203,982 for total employment and 458,223 for total population.

A number of socioeconomic conditions affect the demand for nonmotorized transport, including locations of traffic generators, demographics, and activity centers (density and mix). Traffic generators attract the traveling public because of their high employment concentrations or numbers and/or general interest of the public, and include educational campuses, employment centers, medical centers, recreation centers, and parks. (Figure 1 includes traffic generators for the ARTS area.)

Diverse population groups have different needs and resultant affects on transportation modes. Walking and cycling comprise a significant amount of travel for work, school, and recreational trips among young, old, and low-income persons. Young people (ages 10 to 20), elderly, and low-income people tend to rely more on walking for transport. Young and low-income people tend to rely on cycling for transport. Walking and bicycling are very popular forms of travel among school age people, as mentioned.

This applies to elementary, middle school, and college students. In many college communities a large portion of school-destined trips are made by walking or bicycling.

Activity centers tend to be areas with higher population and/or employment numbers and more intense and mixed land uses (and can include traffic generators). Walking and bicycling for work or errand trips tend to increase with density. A higher density usually translates into buildings that are closer together, and perhaps less available parking, and makes walking and bicycling more practical than driving. Activity centers include commercial districts, government centers, and town centers. Figures 2 and 3 depict the spatial distribution of population and employment for the ARTS area according to 1999 data. Census data depicts high areas of employment in eastern Richmond County, which can be attributed to the location of the medical center complex and a number of manufacturing facilities. There are also high employment figures in the central and northeastern portion of Columbia and central Aiken County.

3.2 Local and Regional Planning Plans and Projects

3.2.1 Augusta Regional Transportation Study Bikeway Plan

The ARTS Technical Coordinating Committee (TCC) is one of three committee's responsible for guiding the development of regional transportation plans. The 1994 Bikeway Plan was directed by a Bikeway Plan task force, which was created as a subcommittee of the TCC. This group inventoried current road conditions, mapped corridors where conditions could be improved for bicycle use, surveyed attitudes toward bicycling, reviewed alternate bicycle facility types, and developed goals and objectives for the plan.

The 1994 Bikeway Plan included results from a survey administered through two separate methods, including a random telephone survey and a survey distributed to local bicycle advocacy groups. Although the results from these surveys are not statistically valid, several relevant points can be taken from this information, including:

- A large percentage of members of local advocacy bike groups commute to work at least once a week.
- Inconsiderate drivers were indicated as the most serious problem facing bicyclists in the region.
- The majority of respondents preferred a marked bike lane over a signed bike route, a bikeway separated by a barrier, or a bikeway completely separated from all other roadways.

The 1994 Bikeway Plan also identified several strategies, projects, and programs to achieve the goals and objectives and identified potential sites for bikeways. The plan identified changes to local land use policies, bicycle safety programs, and recreational trails, in addition to three specific corridors designated for bicycle improvements. Several recommendations of the original plan have been implemented, including the provision of bicycle parking racks at Augusta Public Transit's (APT's) transfer facility. The three bicycle corridors were later expanded to 118 bicycle corridors in the ARTS 2015 Long-Range Transportation Plan.

Additional bicycle-related projects that have been federally funded include:

- Phases I through IV of the North Augusta GREENEWAY
- Evans-to-Locks Road Multiuse Trail
- Phase II of the Augusta Canal Multiuse Trail (contract awarded December 2002)
- Augusta State University History Walk (under construction)
- Lake Olmstead Trail Connector to the Augusta Canal

3.2.2 ARTS Long-Range Transportation Plan (LRP)

The ARTS 2015 Long-Range Transportation Plan was adopted in 1999, with an amendment in 2001, extending the planning horizon to 2025. The long-range transportation plan identifies all regional projects spanning a 20-year horizon that will receive federal and local funding. Goals of the long-range plan include the following:

- Identify near-term demand for passenger and goods movement.
- Identify adopted congestion management system strategies.
- Identify pedestrian walkway and bicycle facilities.
- Assess capital investment and other measures to preserve the existing transportation system.
- Include a multimodal evaluation of the transportation, socioeconomic, environmental, and financial impact of the transportation plan.
- Identify corridors and subareas where major investment studies may be needed.
- Reflect consideration of local plans, goals, and objectives.

- As appropriate, indicate transportation enhancement activities.
- Include a financial plan.

3.2.3 Supporting Local and Regional Planning Activities

The ARTS region contains a multitude of other local and regional plans and projects that demonstrate local interest and concern with bicycle and pedestrian issues, including other transportation plans, land use/design plans, and bicycle and pedestrian programs. These activities demonstrate that bicycle and pedestrian and related safety and accessibility issues are being incorporated into local and regional plans. Additionally, these plans demonstrate commitment for a multimodal region from local communities with local development regulations, programs, and funding sources that address and support bicycle and pedestrian connectivity. A full summary of these plans is included in Appendix C.

Local and Regional Transportation Plans
ARTS Congestion Management System
ARTS Intersection Accident Analysis (IAA)
Augusta Medical Center Traffic Operations and Safety Improvements Study
Augusta Canal Pedestrian and Bicycle Trail Project Concept Report

Local and Regional Land Use and Urban Design Plans
Aiken Greenspace Plan
Augusta Canal Master Plan
Augusta-Richmond County Corridor/Gateway Action Plan
Central Riverfront District Development Program
Columbia County Growth Management Plan
Columbia County Greenspace Program
Evans Town Center Urban Design Plan
North Augusta Riverfront Redevelopment District Master Plan
North Augusta GREENEWAY Plan
Richmond County Greenspace Program

Local and Regional Bicycle- and Pedestrian-Related Programs
Aiken County Road Improvement Program
Augusta SPLOST Program
Columbia Street Light Policy
North Augusta Sidewalk Program

Ongoing Transportation Activities
Whiskey Road Study
Whiskey Road/Silver Bluff Road Connector Study
North Augusta Access Management Study

3.2.3.1 Current Projects

There is also evidence that bicycle and pedestrian projects are being implemented in the region. Residents are beginning to become accustomed to bicycle and pedestrian facilities and will expect more in the future. Projects relevant to this study include Phase I of the I-520 extension and the possible relocation of the 1.5-mile CSX Railroad spur in downtown Augusta. The I-520 extension currently under way includes construction of a bridge over the Savannah River. CSX has indicated that it has filed for abandonment of the rail line based on interest from the city to develop the line as a trail project. Finally, North Augusta has adopted a resolution supporting two projects, including a dedicated bikeway on the I-520 Bridge and the conversion of the 6th Street railroad bridge to a trail.

Additionally, there are several ongoing Transportation Enhancement (TE) projects in the region including the following:

- Euchee Creek Greenway and Trails – Grovetown – This project includes constructing a multiuse trail (bike and pedestrian) along Euchee Creek from Harlem-Grovetown Road to Wrightsboro Road. The project received a fiscal year 2002–2003 Transportation Enhancement (TE) program award of $500,000.

- Evans Towne Center – This project involves installing sidewalks on Ronald Reagan Drive between Washington Road and North Belair Road in the vicinity of the Evans Government Complex (Columbia County). Phase I of the project received a fiscal year 2002–2003 TE program award of $130,000 (pedestrian). The project has been designed and is currently out for bids. The bid opening was scheduled for December 19, 2002.

- Augusta Canal Multiuse Trail, Phases I and II – Phase I includes a new footbridge next to the Bulkhead gates at Lake Olmstead. Phase I was completed in September 1999. Phase II of the project includes improvements to the existing canal towpath from the Headgates in Columbia County to 13th Street in downtown Augusta, the marking of Fenwick Street for bike lanes, and installation of "Share the Road" signs on other downtown streets connecting to the Augusta Riverwalk and Dyess Park. A multiuse trail, connecting Riverwalk to the Augusta Canal, was deleted from Phase II because of funding constraints. The design for New Bartram Trail included three pedestrian bridges: one each at Hawks Gully, the King Mill Tailrace, and the Sibley Mill Tailrace. As part of the project, a new section of multiuse trail will be developed along an existing Georgia Power easement located between Lake Olmstead and Grace Street in the Harrisburg neighborhood. Bids were opened in early December 2002 and an award is expected as soon as Georgia

Department of Transportation (GDOT) approves the low bidder. Funding for the multiuse trail includes approximately $1,000,000 in TE funds.

- Augusta State University History Walk Phases I and II – Phase I involves constructing a "history walk" (pedestrian), brick wall, and related appurtenances along the Walton Way frontage of the Augusta State University (ASU) campus. Phase I also covers restoration of the historic guardhouse located at the corner of Walton Way and Katherine Street. Phase II includes the design and construction of history walk extensions on the Katherine Street and Arsenal Avenue sides of the campus. Both phases have been awarded TE grants ($700,000 for Phase I and $500,000 for Phase II). Phase I is under construction, and Phase II is scheduled to be let for bids in January 2003. A separate pedestrian/bicycle path from the ASU main campus to the ASU athletic complex on Wrightsboro Road was deleted from Phase II because of funding constraints.

- Lake Olmstead Multiuse Facility – A project involving the construction of a walk/bike trail extension on the southeastern side of Lake Olmstead. The project begins near the existing boat ramp (the Julian Smith BBQ Pit is nearby) and extends in a northeasterly direction for about 3,200 feet along the lakeshore to a point near the intersection of Milledge Road and Lakeshore Loop Road. This provides a connection to the new footbridge over the Augusta Canal, which is just across Lakeshore Loop Road from the project terminus. The project received a fiscal year 2000–2001 TE program award of $75,000, and construction was completed in April 2002.

- Evans-to-Locks Multiuse Facility – A three-phase project to construct a multiuse trail (bike and pedestrian) along Evans-to-Locks Road from the Savannah Rapids Pavilion to the Evans Government Complex area. Phase I, from the pavilion to near the Fury's Ferry Road intersection, was awarded a TE grant and is essentially complete. Phase II will extend from near Fury's Ferry Road to Blue Ridge Drive. Phase III will extend from Blue Ridge Drive to the government complex. Phases II and III have not received TE funding to date.

- North Augusta GREENEWAY River Extension Phases I and II – Project involves extension of the GREENEWAY along an abandoned railroad right-of-way in an area between downtown North Augusta and development adjacent to the Savannah River (bike and pedestrian). Fiscal year 2003 TE funding of $178,000 is earmarked for Phase I. Phase II might be completed with $224,000 in fiscal year 2004 TE funds allocated to "North Augusta Enhancements."

- Burnettown Sidewalks – Project involves constructing sidewalks at various locations in the city of Burnettown, South Carolina. A total of $44,000 in fiscal year 2003 TE funds is allocated to Phases I and II. Phase III is to be funded with $21,000 in fiscal year 2004.

3.3 State Plans and Programs

3.3.1 Georgia

In August 1995, the State Transportation Board adopted several goals to guide the development and implementation of a statewide bicycle and pedestrian system. These goals are listed below:

- Promote nonmotorized transportation as a means of congestion mitigation.
- Promote nonmotorized transportation as an environmentally friendly means of mobility.
- Promote connectivity of nonmotorized facilities with other modes of transportation.
- Promote bicycling and walking as mobility options in urban and rural areas of the state.
- Develop a transportation network of primary bicycle routes throughout the state to provide connectivity for intrastate and interstate bicycle travel.
- Promote establishment of U.S. numbered bicycle routes in Georgia as part of a national network of bicycle routes.
- Encourage economic development opportunities that enhance bicycle and pedestrian mobility.

These goals and the GDOT Statewide Bicycle and Pedestrian Plan guide activities under the Georgia Bicycle and Pedestrian Initiative. The plan depicts 14 signed bicycle routes within the statewide network that comprise approximately 2,943 miles. These routes are to complement other bicycle and pedestrian facilities that are planned or under way.

GDOT incorporates planning bicycle and pedestrian facilities into programmed improvement projects as they move through the design and construction stages.

3.3.2 South Carolina

A Bicycle and Pedestrian Infrastructure Advisory Committee guides the South Carolina State Pedestrian and Bicycle Program. As part of this program, information is being collected across the state to determine funding needs and models for the state. Information being collected includes projects that have been completed in the last five years; projects in current TIPs, including those that are being funded from other sources; projects for which no source of funding has been identified; and model projects for other areas of the state. Currently the state does not identify planned bicycle and pedestrian projects. South Carolina reviews the possibility of adding bicycle and/or pedestrian routes when a road is resurfaced and adequate roadway width is available. South Carolina also encourages the use of bikeability and walkability checklists and provides forms for communities to use. Under new guidance from the Director of SCDOT, all new construction projects are required to include bicycle/pedestrian facilities unless it is deemed impossible to include them in the project.

3.4 Regional Organizations

There are several organizations within the urbanized areas of Aiken, Columbia, and Richmond counties that can assist with the implementation of the Bicycle and Pedestrian Plan recommendations. These groups include local bicycle and pedestrian advocacy groups such as Aiken Bicycle Club, Aiken Running Club, Augusta Striders, Aiken Mall Walkers, and Augusta Mall Walkers. The Neighborhood Alliance, which serves as a key organizing unit for many neighborhood associations in Richmond County, and the Augusta Canal Authority, which maintains the Augusta Canal, can also provide assistance.

3.4.1 Safe Communities

Safe Communities is a national organization and movement designed to empower local concerned citizens and provide them with a forum to address traffic safety problems and solutions. The primary purpose of the Augusta Safe Communities program is to assess traffic safety problems, create a coalition of community leaders and concerned citizens, and prioritize problems and solutions. Recently, the Safe Communities Coalition of Augusta initiated an effort to map crash data in order to target areas for increased enforcement of aggressive driving laws. In addition, Safe Communities Coalition of Augusta volunteers teach high school health classes about aggressive driving and the state's graduated licensing law. There is also a Safe Communities Coalition in Aiken, which operates a Comprehensive DUI Prevention Campaign.

3.5 Transit Service

The study area is served by two separate public transit agencies: Aiken County Transit and Augusta Public Transit.

3.5.1 Aiken County Transit

Aiken County Transit System (AT), established in 1990, is a division of the Aiken County government. AT provides fixed-route and complementary paratransit service between the cities of Aiken and North Augusta through the Midland Valley area. The 47-square-mile service area is estimated to have a population of 67,645 (1990 Census). The two-bus interconnecting system carries approximately 24,000 passengers per year.

3.5.2 Augusta Public Transit

Augusta Public Transit (APT) is a municipal department providing fixed-route service to the citizens of Augusta-Richmond County and a selected portion of Columbia County. The 12-route configuration is a radial pattern extending from downtown Augusta. The department also provides paratransit service along a ¾-mile corridor in conjunction with the fixed-route service. In 1997, APT carried approximately 1.3 million passengers across its 129.6-square-mile service area. The fleet consists of 29 vehicles. Funding is derived from three sources: the Federal Transit Authority (FTA), local contributions (city of Augusta general fund), and transit revenues. The APT services include a demand-response service, Richmond Transit, with five vehicles providing on-call services throughout Richmond County. This service is funded partially through the Richmond County Council on Aging.

4. Bicycle and Pedestrian Design Guidelines

Minimum standards for bicycle and pedestrian safety were developed for the ARTS study area based on an analysis of existing standards and public input. The design standards included in this document represent recommended minimum guidelines that can be used throughout the region to direct the consistent design of bicycle and pedestrian facilities and to assist with the development of cost estimates. Included in this section is a discussion of the different types of users and their needs, which should be considered when selecting a facility type.

4.1 Existing Standards and Guidelines

The following summarizes information used in the development of the design guidelines, including local, state, and federal design standards.

4.1.1 Local

4.1.1.1 Aiken County Sidewalk and Crosswalk Requirements

Sidewalks are required at the Planning Commission's discretion in subdivisions where it would be desirable to continue sidewalks that exist in an adjoining subdivision, and in subdivisions where sidewalks are necessary to provide pedestrian access to community facilities such as schools, shopping areas, and recreation areas.

Crosswalks are required to be at least 10-feet-wide and to be located in areas where deemed necessary to provide adequate pedestrian circulation or access to schools, shopping areas, recreation areas, or destination facilities.

4.1.1.1.1 North Augusta Zoning and Development Standards

The North Augusta Zoning and Development Standards require pedestrian facilities in the form of sidewalks depending on road classification and intensity of nearby development. The Comprehensive Plan dictates that sidewalks are not always necessary in lower-density areas but may be necessary in more intensely developed or developing areas. Requirements include 5-foot-wide sidewalks located either parallel to the street or, in planned development areas, away from the street network in order to better link dwelling units, on-site recreation areas, and parking areas. Bikeways are required if paths are included with the GREENEWAY Pedestrian Bicycle Trail or the city's official bikeway system. Bikeways are required to be delineated with signage and located in the outside lane of a roadway or adjacent to the curb or shoulder.

4.1.1.2 Augusta-Richmond County Sidewalk Requirements

The Augusta-Richmond Street and Road Design Technical Manual establishes minimum requirements for the design and construction of streets, roads, and accessory structures. The manual also provides design standards for embankments, pavement, storm drains, sidewalks, deceleration lanes, and driveways. Sidewalks are required in urban areas and adjacent to other public facilities at the discretion of the city engineer. Design and construction of sidewalks, ramps, etc., are in accordance with federal and state guidelines.

4.1.1.3 Columbia County Requirements

Sidewalks are required, at the discretion of the Planning Commission, within a mile of a school in Columbia County.

4.1.2 State Guidelines and Standards

Both Georgia and South Carolina use the American Association of State Highway and Transportation Officials (AASHTO) *Guide for the Development of Bicycle Facilities* and the Federal Highway Administration (FHWA) publication *Selecting Roadway Design Treatments to Accommodate Bicycles* to design bicycle facilities. However, GDOT has established a standard for rural bike lanes that is slightly different than the urban section bike lane recommended by AASHTO's guide. The most significant difference from AASHTO's standard bike lane is the addition of a rumble strip between the vehicular travel lane and the bicycle lane. GDOT encourages the placement of a 16-inch-long by 4-inch-wide milled rumble strip that begins 1 foot from the edge of the travel lane on rural roads. The milled rumble strips are to have a 12-foot gap every 28 feet to allow cyclists to enter/exit the vehicular travel lane.

GDOT is in the process of completing a document titled *A Pedestrian Facilities Design Guide,* which will provide more specific standards for the design, construction, and maintenance of pedestrian facilities. Specific standards will be provided regarding general accessibility, children and school zones, trails and multiuse paths, sidewalks, walkways, intersections, crossings, traffic calming, access to transit, site design, and safety in work zones.

4.1.3 Federal

TEA-21 defines a bicycle transportation facility as "new or improved lane, path, or shoulder for use by bicyclists and a traffic control device, shelter, or parking facility for

bicycles." The definition of a pedestrian includes not only a person traveling by foot but also "any mobility impaired person using a wheelchair."

Flexibility in Highway Design, a publication from the Federal Highway Administration (FHWA), provides guidelines for bicycle and pedestrian facilities and encourages designers to expand upon criteria recommended by AASHTO. "The intent of this policy is to provide guidance to the designer by referencing a recommended range of values for critical dimensions. Sufficient flexibility is permitted to encourage independent designs tailored to particular situations."[1] Within this document are recommendations for pedestrian facilities regarding placement, width, street furniture, and materials and bicycle facilities.

4.1.3.1 Americans with Disabilities Act

The Americans with Disabilities Act (ADA), a public law that prohibits discrimination on the basis of disability in all services, programs, and activities provided to the public by state and local governments, dictates a minimum sidewalk width of 5 feet. Since adoption of the ADA, 5 feet has become the recommended design standard for sidewalks throughout the United States. In addition to sidewalk width, ADA provides guidance on the design of accessible routes including curb ramps. A built-up curb ramp should extend outward and slope to the road. The sides must be tapered, and a maximum slope of 1:10 is required so that there are no drop-offs along the edges. Ramps should also be located so that they do not extend into vehicular traffic lanes. ADA requirements are currently being reviewed by FHWA.

4.2 Facility Users

4.2.1 Bicycle Users

The Guide for Development of Bicycle Facilities, developed by AASHTO, recognizes three types of users for bicycle facilities:

Type A Cyclists: Advanced adult cyclists best describe the Type A Cyclist. These cyclists are aware of the rules of the road and are skilled at maneuvering a bicycle through vehicular traffic. Typically, these cyclists are commuters or cyclists who are confident with their skills and more interested in reaching a destination in the shortest

[1] Flexibility in Highway Design, U.S. Department of Transportation, Federal Highway Administration.

time possible than they are in scenery or the added safety of less-traveled routes. These cyclists will use any road legally open to bicycle traffic.

Type B Cyclists: A typical adult qualifies as a Type B Cyclist. These cyclists know the rules of the road and know how to ride a bicycle. The main distinction is that they prefer less-traveled routes to and from their destinations and are less confident along roadways with high-volume vehicular traffic. These cyclists may use facilities for transportation purposes, but will forego the most direct and fastest route in favor of a less traveled, safer, or more scenic route. Type B Cyclists need facilities that are safer and less intimidating than those required by Type A Cyclists.

Type C Cyclists: Children are the prototypical Type C Cyclist. These cyclists may be very skilled cyclists. However, they are not aware of the rules of the road because they have never legally driven a motorized vehicle in traffic. These cyclists ride for both recreation and transportation; the most obvious destination is an academic institution, such as an elementary school, middle school, high school, or library. Type C Cyclists should not travel along routes with motorized vehicles.

4.2.2 Pedestrian Users

Pedestrian users are not defined by AASHTO; however, the Atlanta Regional Commission's 2002 Regional Transportation and Pedestrian Walkways Plan defines adult pedestrians, child pedestrians, environmental justice community participants, and pedestrians with disabilities. Slight adaptations of these descriptions are included below, except for pedestrians with disabilities, because ADA requirements provide accommodations for these pedestrians.

Adult Pedestrians: Adult Pedestrians use pedestrian facilities for commuting, recreation, and exercise. Adult Pedestrians are aware of the rules of vehicular traffic. Adult Pedestrians can have difficulty crossing high-speed, multilane streets that lack median refuge islands or pedestrian signals.

Child Pedestrians: Child Pedestrians see and hear the world differently than adults. Children often have trouble judging traffic speed, gaps in traffic, or whether a car is coming, going or standing still. Children are shorter than adults and have limited peripheral vision. Neighborhood streets with sidewalks and shared-use facilities can accommodate Child Pedestrians.

Traditionally Underserved Pedestrians: Within urban areas are areas of traditionally underserved populations, including those who do not speak English and those that must rely on alternate modes of transportation. People who do not read the English language

well may also not be able to read warning signs that are written in English. Therefore, safety and directional signage should be shown in symbols rather than written words in established areas that have a high number of non-English speaking residents. The Manual on Uniform Traffic Control Devices (MUTCD) offers several options for regulating the flow of vehicular and pedestrian traffic. Symbols within those standards that are graphic, rather than written, should be encouraged in these areas.

In addition, many pedestrians are not able to drive and rely on walking as a primary mode of transportation. These pedestrians rely on safe sidewalks and crossings. Sidewalk facilities in neighborhoods that have a high nondriving population or those with a lower car-to-population ratio should be prioritized, and provide connections from residential neighborhoods to destinations such as employment centers, shopping areas, transit facilities, and public and semiprivate institutions.

Pedestrians with Disabilities: The ADA prohibits discrimination to pedestrians with disabilities. Pedestrians who are blind, deaf, or rely on wheelchairs have needs specific to those types of disabilities. For instance, people who are deaf need visible warnings about crossing vehicular traffic. People with vision impairments need tactile indications that they are approaching an intersection or other hazard. Because they cannot see safety signs, they need audible indicators to inform them of proper times to cross the street. Pedestrians in wheelchairs are not able to mount curbs or maneuver through rough, narrow, or steep surfaces.

4.3 Recommended Minimum Design Guidelines

The following are recommended design guidelines for bicycle and pedestrian facilities in the ARTS area. These are meant to provide guidance during the planning and construction of bicycle and pedestrian facilities and are not meant to infer that local jurisdictions can surpass these designs.

4.3.1 Pedestrian Facilities

Pedestrian facilities should provide as much separation from vehicular traffic as possible and be at least 5 feet in width. In more urban areas where heavy foot traffic is expected, a wider sidewalk may be more desirable. Because pedestrians are not insulated from weather, amenities such as shade trees and pedestrian shelters are desired whenever possible. Safety should be enhanced with pedestrian lighting. Amenities such as trash receptacles, directional signage, streetlights and benches can also enhance the pedestrian experience.

4.3.1.1 Typical Sections

The following typical sections are recommended for sidewalks according to the location of the facility, i.e., adjacent to ditches, grassy or decorative paving strips, or retaining walls.

ARTS REGIONAL BICYCLE AND PEDESTRIAN PLAN
MINIMUM DESIGN STANDARDS FOR SAFETY

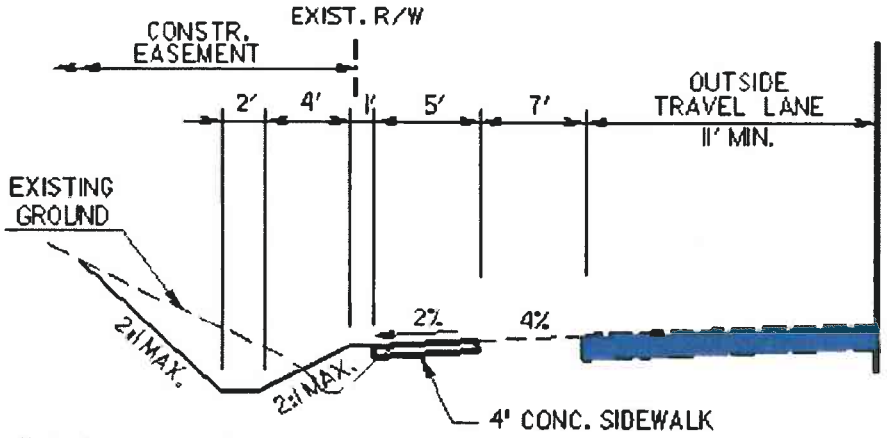

TYPICAL SECTION USE:
WHERE EXISTING RIGHT-OF-WAY CANNOT ACCOMMODATE THE CONSTRUCTION OF A SIDEWALK AND ADJACENT DITCH PARALLEL TO THE ROADWAY

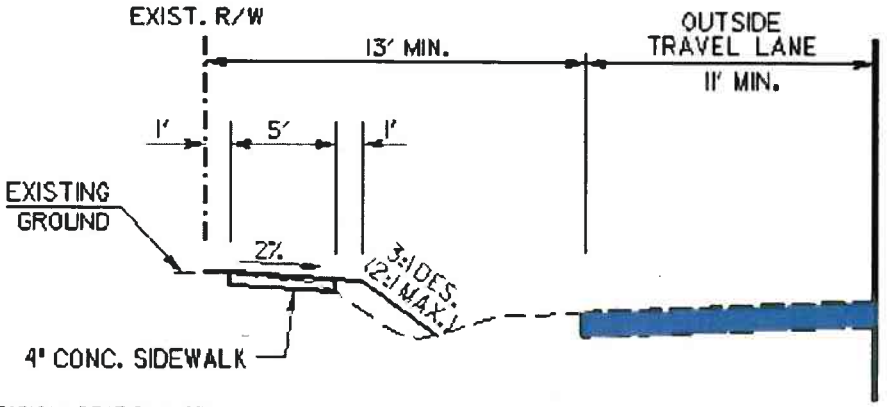

TYPICAL SECTION USE:
WHERE EXISTING RIGHT-OF-WAY IS SUFFICIENT AND TERRAIN WILL ALLOW THE CONSTRUCTION OF THE SIDEWALK BETWEEN THE DITCH AND RIGHT-OF-WAY LINE

SIDEWALK FACILITIES

NOT TO SCALE

ARTS REGIONAL BICYCLE AND PEDESTRIAN PLAN
MINIMUM DESIGN STANDARDS FOR SAFETY

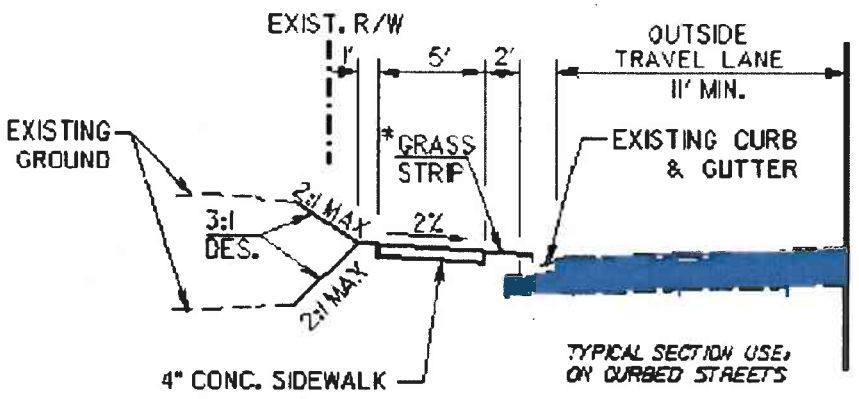

* GRASS STRIP MAY BE REPLACED WITH CONCRETE OR DECORATIVE PAVERS

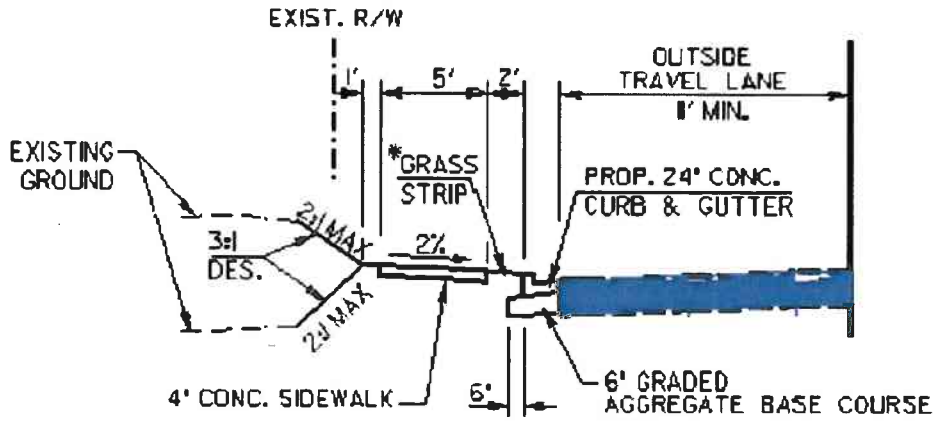

TYPICAL SECTION USE:
RURAL ROADWAY WITH LIMITED RIGHT-OF-WAY, REQUIRING CURB & GUTTER

SIDEWALK FACILITIES

NOT TO SCALE

ARTS REGIONAL BICYCLE AND PEDESTRIAN PLAN
MINIMUM DESIGN STANDARDS FOR SAFETY

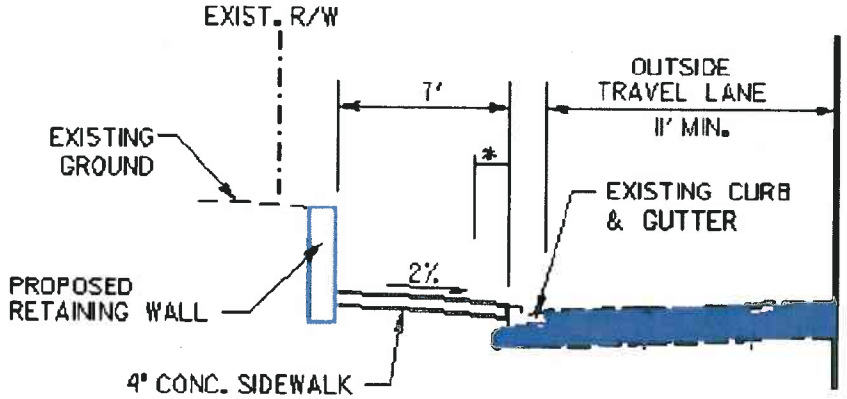

TYPICAL SECTION USE:
ON CURBED STREET WHERE GRADING IS NOT ALLOWED OR POSSIBLE BEYOND EXISTING RIGHT-OF-WAY

* OPTIONAL 8' DECORATIVE PAVER AREA OR GRASS STRIP

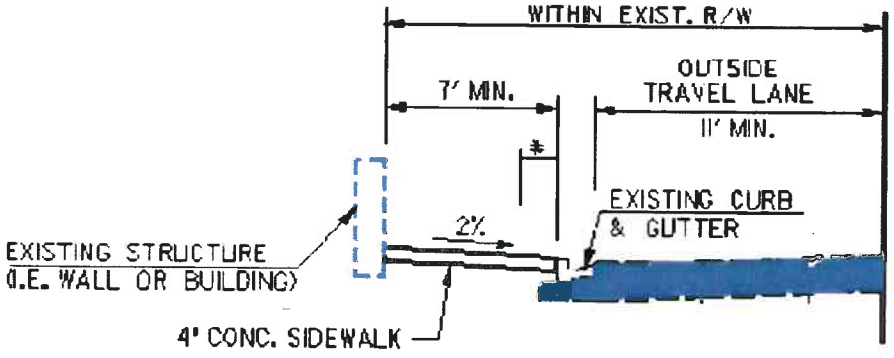

TYPICAL SECTION USE:
ON CURBED STREET WITH EXISTING STRUCTURES

SIDEWALK FACILITIES

NOT TO SCALE

4.3.1.2 Pedestrian Facility Costs

All road improvement projects should include pedestrian facilities when allowed. Standalone pedestrian projects should be identified and submitted by the local jurisdictions during the Transportation Improvement Program planning process. Pedestrian facilities should only be submitted for federal funding if they provide school, activity center, or transit connectivity. Projects will then be further evaluated and prioritized by the regional bicycle and pedestrian steering committee based on the evaluation criteria worksheet developed for this purpose. Estimated project costs for sidewalks are explained in the table below.

Table 1. Pedestrian Facility Type Costs

Sidewalks adjacent to ditches	$44 per linear foot
Sidewalks adjacent to grassy/decorative strips	$44 – $62 per linear foot
Sidewalks adjacent to existing retaining walls	$30 – $45 per linear foot

4.3.2 Bicycle Facilities

4.3.2.1 Typical Sections

Minimum design standards are recommended for bicycle facilities including share the road, restriping, urban bike lanes, and rural bike lanes.

4.3.2.1.1 Share the Road

An opportunity to provide routes for cyclists with relatively little financial investment is the signed shared roadway. In a signed shared roadway facility, a bicyclist shares the lane with motorized vehicles. Existing travel lane widths of at least 14 feet should be considered when choosing routes suitable for share the road signage. Slower speeds are preferred over faster-moving traffic routes. A relatively low traffic volume is also desired to minimize the potential for conflicts between cyclists and motorists. Long sight distances are also desirable. Type A cyclists are the most likely to use this facility, however, it is appropriate for Type B and Type C cyclists (under the guidance of adults). Physical improvements to an existing road or street may include installation of bicycle-safe drainage grates, improved railroad crossings, resurfacing, and signal timing/detector systems that respond to bicycles.

Share the road signage should be placed approximately every ½-mile in urban conditions and every mile in rural areas. The route sign should serve to alert both motorists and bicyclists that they are to share the travel lane. Directional signage

should be added to existing sign poles or mounted to new sign posts to help cyclists maneuver through the safest routes to and from major destinations.

4.3.2.1.2 Restriping

Another low-cost option for bicycle routes is to restripe a road where pavement width allows. Four feet of additional usable pavement width is optimal along straight, relatively flat stretches of road. Additional width may be desirable where site distance is limited, on steep inclines, or where on-street parking is present. Restriped areas should be at least 4-feet-wide. If a guardrail or other roadside hazard exists, then 5 feet of usable width is recommended. This facility will serve Type A cyclists, Type B cyclists, and Type C cyclists with the guidance of adults. This option still requires safety and directional signage and the removal of hazards. Road decals and signage should be included every 1,000 feet on existing pavement.

4.3.2.1.3 Widening to Accommodate Rural Bike Lanes

A rural bike lane is an appropriate facility along routes in rural areas and includes striping and rumble strips to provide protection for bicyclists. This facility is appropriate for all users. A bike lane provides a delineated area for bicyclists and therefore makes their movements more predictable. In addition, motorists are less likely to swerve out of their lane when passing a cyclist traveling in a designated bike lane. Bike lanes should always be one-way facilities and travel should be in the same direction as vehicular traffic. It is recommend that rumble strips, stripings, road decals, and signage be placed every 1-mile when adding a rural bike lane.

4.3.2.1.4 Widening to Accommodate Urban Bike Lanes

An urban bike lane is recommended for areas appropriate for all user types where curb and gutter are present. It is recommended that sidewalk, curb and gutter, striping, road decals, and signage be placed every 1,000 feet when adding pavement for an urban bike lane.

ARTS REGIONAL BICYCLE AND PEDESTRIAN PLAN
MINIMUM DESIGN STANDARDS FOR SAFETY

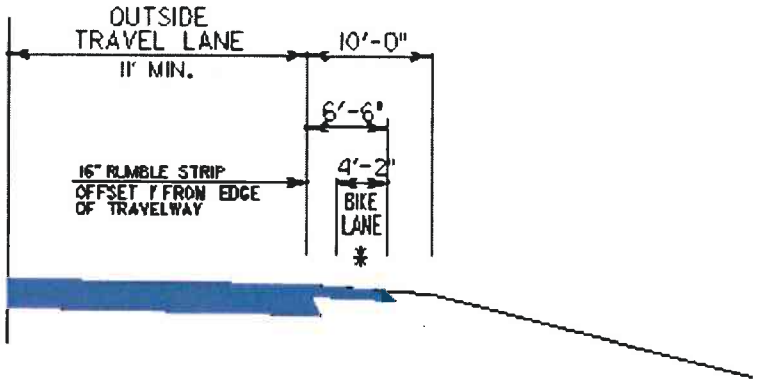

BICYCLE FACILITIES - RURAL

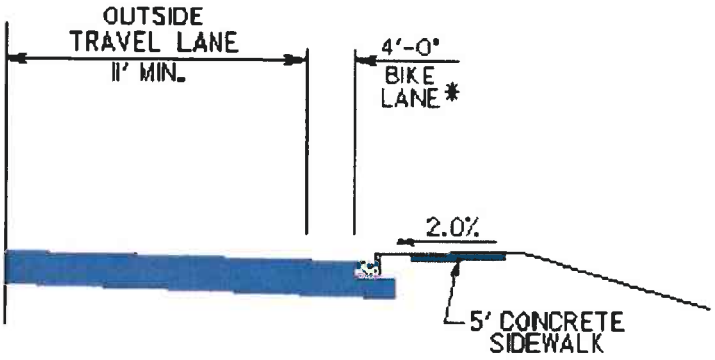

BICYCLE FACILITIES - URBAN

* REFER TO THE MANUAL ON UNIFORM TRAFFIC CONTROL DEVICES, CURRENT EDITION, FOR BIKE LANE SIGNING AND STRIPING

NOT TO SCALE

4.3.2.2 Bicycle Facility Costs

Table 2 provides funding information and assumptions for the bicycle facility types as they relate to the minimum design guidelines for safety.

Table 2. Bicycle Facility Type Costs

Facility Type	Assumptions	Signage Costs*	Facility Costs
Share the Road	Signage placed every ½ mile	$1,000 per mile	None
Restriping	Restriping existing roadway with bike lanes and signage every ½ mile	$810 per 1,000 feet	$0.80 per linear foot
Urban Bike Lane	Pavement, sidewalk, curb and gutter, striping, and signage placed every 1,000 feet	$810 per 1,000 feet	$130 per linear foot
Rural Bike Lane	Pavement, rumble strips, striping, and signage placed every 1 mile	$810 per mile	$115 per linear foot

*Signage costs include bike symbols on pavement. Signage costs will vary depending on number of intersections and topography of site.

4.3.3 Multiuse Facilities

Multiuse facilities contain wide pavement so bicyclists and pedestrians can pass one another comfortably. All types of cyclists and pedestrians use shared-use paths. This type of facility can provide shortcuts through residential neighborhoods by connecting cul-de-sac streets; can act as connections between major destinations, such as schools and neighborhoods; and can serve as regional off-road corridors linking pedestrian and bicycle networks in towns and cities, forming a safer and more comprehensive regional network. Because shared-use paths do not share the right-of-way with vehicular traffic and often cross streets at grade separations, they are ideal for all types of users. Type A cyclists often prefer to avoid shared-use paths in favor of more direct, on-street routes that may be available. The design guidelines recommend that these facilities be paved.

4.3.3.1 Typical Section

The minimum width that will accommodate both cyclists and pedestrians traveling in two directions is 10 feet. This facility is recommended only where vehicle access is limited.

ARTS REGIONAL BICYCLE AND PEDESTRIAN PLAN
MINIMUM DESIGN STANDARDS FOR SAFETY

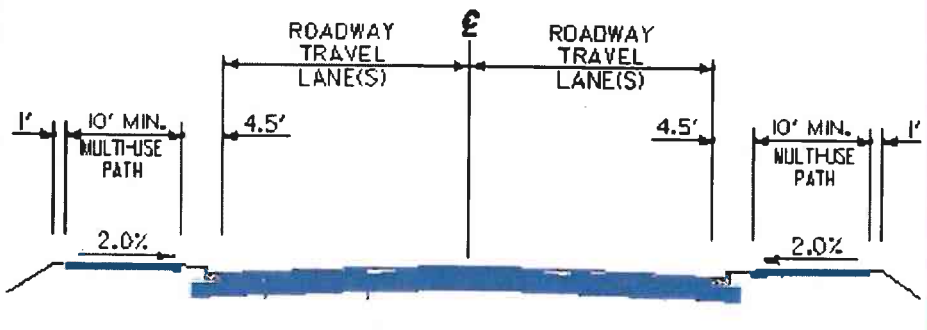

MULTI-USE FACILITY

NOT TO SCALE

Multiuse Facility Costs

Table 3 shows the costs associated with multiuse facilities.

Table 3. Multiuse Facility Type Costs

Facility Type	Assumptions	Signage Costs*	Facility Costs
Multiuse	No curb and gutter; signage placed every ½ mile	$2,500 per mile	$55 per linear foot

*Signage costs include bike symbols on pavement. Signage costs will vary depending on number of intersections and topography of site.

4.4 Supporting Facilities Design Recommendations

This section provides minimum safety design guidelines for sidewalks and bicycle routes/lanes. However, there are a multitude of additional facilities that support and connect pedestrian and bicycle routes. While travel lane design is outside the scope of this plan, several key items should be noted, particularly regarding safe crossings and traffic speed.

The pedestrian and bicycle network is interrupted by the vehicular network, including roads and driveways. Pedestrian and motorist conflicts occur most often when pedestrians attempt to cross a street. Crosswalks should be well marked and supplemented by refuge islands, medians, signage, and signalization. Mid-block crosswalks should also be considered around traffic generators. Pedestrian signage can help to make motorists aware that there are pedestrians needing to cross streets. School zones are of particular importance and should always be signed as such. Driveways are another potential pedestrian and motorist conflict. Shared driveway requirements can reduce the number of driveways a pedestrian has to cross, therefore reducing the pedestrian and motorist conflict points. Shared driveways can also help reduce conflicts for bicyclists, in that there are fewer points of motor vehicle entry onto the bicycle route. Consistent paving patterns along sidewalks and across driveways and crosswalks provide a more continuous surface for pedestrians and a visual reminder to motorists that they are crossing a pedestrian route.

Traffic calming can be an important addition to pedestrian and bicyclist safety in that it reduces the speed of vehicles, which can help to make motorists more aware of pedestrians and bicyclists. Traffic calming is defined by the ITE publication *Traffic Calming: State of the Practice* as "the combination of mainly physical measures that reduce the negative effects of motor vehicle use, alter driver behavior and improve

conditions for non-motorized street users." Traffic calming does not mean a reduction in capacity. Typical traffic-calming measures include "skinny" streets, bulb-out traffic circles, chicanes, diagonal diverters, alternate paving materials, speed humps, and neighborhood speed watch programs. Both Georgia and South Carolina have statewide guidelines for the use and design of traffic calming facilities: *Pedestrian Facilities Design Guide* and *Traffic Calming Guidelines,* respectively.

5. Implementation Strategies

The Augusta-Aiken metropolitan region offers numerous possibilities for bicycle and pedestrian travel. Existing pavement on many roadways can be restriped for bike lanes; existing town centers have sidewalks that can be expanded; and natural waterways and abandoned rail corridors provide multiuse trail opportunities. In addition, the community is excited about improving conditions for bicycle and pedestrian travel. However, the full potential and safe use of the bicycle and pedestrian system will not be realized with facilities alone. Increased awareness and education of the viability and safety of these modes of travel are critical, for both users of the system and for drivers. In addition, continued maintenance, funding, land use policies, and ongoing evaluation of the system will be critical to the long-term success of this plan and the bicycle and pedestrian system.

This section begins to describe implementation strategies and is organized into specific categories, such as bicycle and pedestrian programs that promote awareness and safety, maintenance of facilities, measures to promote multimodal connectivity, methods to coordinate bicycle and pedestrian activities, land use strategies, funding policies, and evaluation of the system. Most of these are short-term strategies that can be initiated over the next five years and will lay a foundation for future success and future plans. Section 6 includes bicycle projects recommended for construction over the next 20 years.

5.1 Bicycle and Pedestrian Program Recommendations

Regional bicycle and pedestrian programs and activities should be targeted toward increasing education of the viability of safe bicycle and pedestrian travel and the numerous benefits of walking and bicycling. Education and enforcement efforts can also help increase the safe use of facilities as well as the awareness of facilities through the provision and dissemination of instructional and informational brochures and safety literature.

5.1.1 Educational Programs

Although walking and bicycling are increasingly becoming viable forms of transportation and recreation, there is still a need to raise awareness of the benefits associated with walking and biking. By increasing awareness of the benefits, including improved air quality and health and reduced congestion, both users and nonusers will see the added benefit of walking or riding a bike to run errands, go to work or school, and recreate. These benefits should be incorporated into all regional transportation

literature and planning outreach, including brochures, the web site, and public meetings.

An example of outreach and promotion is an ad/ambassador campaign conducted in Chicago that promotes bicycling. Ads released through various media channels highlight the benefits of bicycling and are further supplemented with ambassadors that go to the community to teach how bicyclists and motorists can share the road.

Another method of increasing usage is to increase awareness of existing facilities. Many MPOs throughout the nation provide both brochures and maps of existing facilities for distribution throughout the community. The state of Georgia provides a statewide bicycle map for distribution. This map also highlights the benefits of walking, safety measures, and applicable laws in addition to statewide bicycle routes. By providing maps of bicycle facilities in the region and advertising the pedestrian friendliness of the many charming town centers in Aiken, Columbia, and Richmond counties, residents will feel more comfortable trying a new route. This will also promote these modes of transportation to visitors to the region.

5.1.2 Safety Programs

Safe use of bicycle and pedestrian facilities, as well as increased awareness of drivers, will be a key component to a successful system and will help to promote long-term use of facilities. With increased use of this transportation mode, it is likely that an increase in crashes will also occur; therefore, safety and outreach programs targeting both users and nonusers will be critical.

Safety programs range from increasing the safe use of facilities for children walking to school, to teaching all levels of cyclists how to be "effective" at riding in an urban environment, to increasing driver awareness and respect for other modes of transportation. Awareness can start with a simple sign or bumper sticker that states, "Share the Road." Drivers must become accustomed to sharing the roadway with bicyclists, and be aware of crossing pedestrians. Both bicyclists and pedestrians should be aware of local traffic laws relevant to safe behavior.

The National Highway Traffic Safety Administration (NHTSA) provides numerous publications geared toward increasing safety, including a Pedestrian Safety Toolkit that provides states and communities with a variety of resources to develop community-wide pedestrian safety initiatives. The resources include NHTSA and FHWA brochures, reports, and training information; a user's guide; a resource manual; a video compilation tape of popular pedestrian safety videos; and an interactive CD-ROM.

A bicycle-related safety tool, also available through the NHSTA, is titled *Along for the Ride: Safety Tips*. This brochure contains numerous safety tips for cyclists that are divided into four categories: Wear a Helmet, Follow the Rules of the Road, Be Visible, and Share the Road. This brochure also highlights the benefits of bicycling and can be used as an educational tool.

An additional state program for bicycle and pedestrian safety includes a pamphlet providing safe bicycling tips for children and adults. This pamphlet, which also highlights South Carolina law as it relates to bicycling, is available through the South Carolina Department of Transportation.

GDOT, partnering with local bicycle and pedestrian nonprofit organizations, has allocated $400,000 to pilot the Safe Routes to School (SR2S) program in two schools (one in Gwinnett County and one in DeKalb County). This four-year pilot program is targeted toward improving physical conditions for cycling and walking and promoting these activities, and is designed to become a guide for other areas in the state. The SR2S program integrates promotion, education, engineering, and enforcement into one overall program. Promotional programs include walk and/or bike to school days, school contests, and escort programs such as the Walking School Bus.

A national program, the Walk This Way program, is part of the international walk to school day, and includes teaching pedestrian safety within schools, documenting risks to pedestrians through data collection efforts, and assisting communities in creating organizations to promote changes in the walking environment. This program, administered through the National Safe Kids Coalition, can be initiated through a local chapter. Currently, Augusta is the only jurisdiction with a chapter.

5.1.2.1 Effective Cycling

Effective Cycling (EC) is a program that promotes the safe use of bicycling facilities through classes that teach safe methods of riding on the road and in traffic and is taught through the League of American Bicyclists. This program leads the nation in teaching the principles of on-road cycling. The Atlanta Bicycle Campaign teaches courses in the Atlanta metropolitan area for both adults and children. The League of American Bicyclists also offers courses, including Road I, Road II, Commuting, Motorist Ed, Kids I, and Kids II. Currently there are no certified instructors within the MPO region; however, the League of Bicycles offers certification classes.

5.1.2.2 World Health Collaborating Helmet Program

The Collaborating Helmet Initiative, which is a World Health Organization (WHO) program, is designed to increase bicyclist safety through the provision of bicycle helmets. This program can be administered at the local level through nonprofit organizations.

Both Georgia and South Carolina operate a volunteer organization, Safe Kids, associated with the National Safe Kids program based in Washington, D.C. Georgia's Safe Kids program, which was instrumental in the enactment of a bicycle helmet law, has distributed more than 7,500 bicycle helmets throughout the state through the WHO program. The director of Safe Kids of Georgia is Beth Strickland, and the South Carolina director is Ree Mallison.

5.1.2.3 Pedestrian Road Show

The Pedestrian Safety Road Show is a motivational interactive workshop designed to assist local communities to mobilize support for pedestrian safety issues and to begin the process of organizing and implementing a community pedestrian safety program. The Federal Highway Administration provides both workshop materials and instructors. A local sponsor is needed to invite community participants and provide the facility.

5.1.3 Enforcement Programs

Appropriate traffic law enforcement can also prevent conflicts and collisions and help encourage traffic safety habits in younger people. This may be achieved through police-sponsored safety workshops aimed at increasing driver awareness of bicyclists and pedestrians.

Each local government should request that its local police department initiate these workshops at local schools and community centers, if they are not already in place. Law enforcement officers should also increase enforcement of crosswalk rules either through ticketing or by giving warnings to drivers failing to yield.

5.1.3.1 Pedestrian Sting

PEDS, an Atlanta-based pedestrian safety advocacy group, has successfully used a Pedestrian Sting operation to raise awareness of pedestrian rights and to reduce dangers for pedestrians. A Pedestrian Sting operation, developed by Lieutenant John Miner and Officer Betsy Cable, of the city of Redmond, Washington, Police Department, uses

undercover police officers and/or volunteers to walk on crosswalks in heavy pedestrian areas where drivers are known to drive fast. Basically, the undercover police officer or volunteer will deliberately use a crosswalk when a car is coming to test whether a motorist will stop and allow the pedestrian to cross. Failure to stop results in a speeding ticket. This tactic should not be used without police department assistance for two reasons: only the police department can give a ticket to the driver, and only a police officer is trained to know if a car is going slow enough to stop, thereby reducing the risk to the "pedestrian." The media is also a key component of this program by reaching drivers through news broadcasts.

5.1.3.2 Neighborhood Pace Car Program

PEDS also uses the Neighborhood Pace Car Program, which helps to reduce speeds through neighborhoods and school areas with the use of a pace car. Pace Car stickers are provided to drivers, who then set the speed of traffic by driving within the speed limit. Neighborhood associations are typical users of this program.

5.2 Design and Maintenance Recommendations

Bicycle and pedestrian designs should be constantly reevaluated for the most desirable and safe practices available. Roadway design should always incorporate bicycle and pedestrian facilities, when allowed, and railroad and bridge crossings should be updated to incorporate these transportation modes. Maintenance is another key consideration when selecting design. Bicycle and pedestrian facilities are particularly sensitive to problems associated with maintenance, leading to a sense that these facilities are not viable options for travel. Specific barriers to the safe use of bicycle and pedestrian facilities include:

- Debris
- Surface irregularities
- Obstructed routes during construction
- Chip seal gravel
- Inappropriate curb cuts
- Ridge cracks
- Vegetation (overhanging and trail intruding)

Measures to overcome these barriers include the following:

- Patch surfaces as smoothly as possible.
- Include estimates of maintenance costs in project budget.
- Establish clear maintenance roles and procedures for bikeways and walkways (should be covered in the agreement with the local jurisdiction during funding).
- Provide maintenance-friendly design and construction techniques.
- Ensure that bicycle-safe sewer grate standard specifications are in place.
- Establish standards and procedures to ensure access and safety to pedestrians and cyclists during construction projects.

Numerous communities have initiated "Spot Improvement Programs" to facilitate the mitigation of hazards along designated bicycle and/or walking routes through small-scale, low-cost improvements with funds from the existing road maintenance budget. In addition, local jurisdictions currently maintain existing roadways, which can be modified to include maintenance of other facilities.

5.3 Multimodal Connection Recommendations

To facilitate the use of bicycle and pedestrian networks, it is necessary to ensure that these networks connect to other modes of transportation, especially transit. Many commuting patterns are much longer than a pedestrian or bicyclist will travel on a single mode of transportation. A connection to transit facilities enables a person to travel farther distances. Bicycle accommodations on buses, bicycle-parking facilities at transfer stations, and pedestrian shelters all increase the viability of a person traveling longer distances.

In July 1999, federal money became available through the Congestion Mitigation and Air Quality (CMAQ) funds to fund the purchase of bike racks for transit vehicles. Several communities in Georgia have taken advantage of these funds and now provide a seamless transition for bicycle users on their commute to work and/or other destinations. Most systems available today allow a rider to load and unload their bicycle from the rack in less than 20 seconds, minimizing any schedule delays. To further promote the use of bikes on buses, other communities have placed stickers on vehicles that say bicycle are welcome and/or operate a program in which local residents can call the city and recommend bicycle parking locations. When locating bicycle parking facilities, visibility, security, weather protection, and adequate clearance should be considered.

5.4 Land Use Recommendations

Traditionally, transportation planning has focused on the provision of transportation networks and how they will facilitate access to and among labor, employment areas, goods and services. Every transportation decision has implications for land use, but has focused less on how land use patterns may impact trip demand and travel mode choice. However, land use policy can be an instrumental tool in achieving a multimodal region by guiding the location and design of existing and future development to create transportation-efficient and pedestrian/bicycle-friendly environments. The relationship between land use and transportation should be reciprocal as land use patterns affect travel decisions and vice versa. Several key elements for creating a transportation-efficient and pedestrian/bicycle-friendly environment include:

- Directing land use and transportation development to provide equal or better access by foot or bicycle to activity centers and traffic generators including education, recreation, retail, and commercial office developments.
- Designing and locating retail, office, and government buildings with convenient pedestrian, bicycle, and transit user access.
- Clustering commercial and residential development in higher-density centers, rather than linear strips along roads.
- Requiring land uses to include a mix of residential, retail, commercial office, and other types of compatible development that make walking and bicycling a viable alternative.
- Requiring pedestrian scale and design at the neighborhood commercial level.
- Coordinating land use decisions with existing and planned transit facilities.

Local jurisdictions have the authority to manage and influence land development through comprehensive planning, zoning, administrative policy, and subdivision regulations.

5.4.1.1 Comprehensive Long-Range Plans

Comprehensive plans provide a base for establishing transportation-efficient land use policy. These plans direct long-term growth through goals and objectives for future land use patterns. Key elements that promote walking and bicycling, which can be incorporated in comprehensive plans, include:

- Commitment to a multimodal transportation network with specific goals and objectives related to increasing pedestrian and bicycle travel.

- Identification of growth areas and activity centers as areas in need of bicycle and pedestrian facilities on the future land use map.

5.4.1.2 Zoning Ordinance

A local jurisdiction's zoning ordinance has a tremendous impact on travel mode and trip demand. Provisions including setback requirements, building orientation, land use separation, and even parking standards influence the way people move about. Currently, most zoning ordinances within the Aiken-Augusta MPO discourage higher-density, mixed-use development or street patterns that provide direct bicycle and pedestrian connections and usually require a separation of commercial and residential uses with lower densities.

Zoning codes can encourage or require developments to include a mixture of uses, such as offices, shopping, and housing that are close to each other. This helps pedestrian and bicycle travel by reducing trip length. Another solution is to require parking lots to be located to the rear of structures, allowing pedestrian access to commercial buildings adjacent to streets. This will prioritize walking over driving. Driveways should be located away from the fronts of commercial buildings to minimize pedestrian and automobile conflicts. Some of the key elements that can be incorporated into a zoning ordinance include:

- Establishing regulatory standards that reflect the policy declarations of the comprehensive plan
- Providing reduced or maximum setback requirements
- Requiring shared driveways and/or rear access locational requirements
- Requiring buildings to be oriented toward the street/sidewalk
- Allowing a mixture of uses with a single zoning district
- Reducing parking requirements for mixed-use areas and/or when providing bicycle parking facilities
- Allowing flexibility for site-specific considerations through the mechanisms of site plan review, special use permits, and variances

5.4.1.3 Site Plan Review Process

Development regulations affect new development and redevelopment. Predetermined dimensional or design standards cannot, and should not, be indiscriminately applied in all situations. Often, site-specific conditions require special attention, resulting in innovative designs that promote pedestrian and bicycle travel. The site plan review process should require site development plans to show vehicular, bicycle, and pedestrian access, internal circulation, parking, landscaping, screening, access locations of adjacent development and those on the opposite side of the street, type of street, sidewalk location, number of lanes, traffic volumes, building location, and existing driveways and intersecting roadways on both sides of the proposed development.

The process should also require that land use planners and traffic engineers review the site plan at the same time to ensure that changes are not made that mitigate the efforts of one department. In addition, an informational brochure could be developed highlighting key factors that help to create a bicycle- and pedestrian-friendly environment.

5.4.1.4 Subdivision Regulations

Subdivision regulations usually dictate street design, building lot placement and design, and block design. The importance of subdivision regulations is often misjudged, as many do not quite understand the benefits. Through the use of these regulations the growth and character of a community can be controlled and public protection can be provided. The subdivision regulations are not merely for the protection of residential developments and those living there, but also those visiting and passing through. Community design methods such as a grid street pattern, relatively narrow street widths, reduced off-street parking requirements, traffic calming strategies, landscaping, and aesthetics all promote safe and appealing pedestrian and bicycle travel.

5.4.1.5 Walkable Communities Program

Although this report highlights only the types of land use patterns that promote the viability of alternate modes of transportation, each community should review specific strategies that can be changed, which usually needs political support. The Federal Highway Administration has developed a Walkable Communities Program that provides training for MPO staff and technical assistance to conduct pedestrian planning workshops in local communities. These workshops can be used to highlight street design and land use strategies to improve the walkability in a neighborhood as well as to generate political support for the necessary changes.

5.4.1.6 School Location and Policy

School trips are often made by walking and bicycling and deserve special attention in this document. These trips can occur only if school sites are selected and designed for pedestrian and/or bicycle access. A study in South Carolina found that the portion of students walking to school is far higher in older (pre-1970) schools than in schools that were built recently because the newer schools tend to be located at the urban fringe.[2] An access plan should be developed for every school (including universities) that addresses how pedestrians and bicyclists will access the school with minimal conflicts with vehicular traffic. The school should also be located as near to its population as possible, thereby reducing trip length.

5.5 Funding Policies and Recommendations

Regional and local government support in the funding arena will be critical to implementing a viable bicycle and pedestrian network. Options include (1) funding bicycle and pedestrian projects as standalone projects, for which local governments identify and select projects (that either meet pedestrian facility criteria or are included in a 20-year list of bicycle projects) and fund projects themselves or submit them to the ARTS MPO for funding, or (2) funding projects as part of road or transit improvements. There are a variety of funding sources available to the ARTS study area including federal, state, local, and private organizations. The key for ARTS is to appropriate these funds in the most efficient and effective manner. For example, low-cost projects can be become most costly when funded by state or federal sources due to the regulatory conditions for their use; therefore local and/or private sources may be the more appropriate avenue for funding. Additionally, both Georgia and South Carolina do not anticipate dedicating funds exclusively for physical improvements such as repaving or widening outside travel lanes specifically to accommodate bicyclists nor improving sidewalks and crosswalks for pedestrians. Instead, procedures are in place so that designers can incorporate these elements into programmed improvement projects. Appendix D provides an overview of the various funding options available for the ARTS study area.

---

[2] *Waiting for the Bus: How Low Country School Site Selection and Design Deter Walking to School*, Southern Carolina Coastal Conservation League (Charleston), 1999.

5.5.1 Low-Cost Funding Strategies

There are a variety of low-cost projects that local governments could explore. These projects have the benefit of being less costly and easier to implement and show immediate progress toward implementation of the bicycle and pedestrian plan goals and objectives. Using nonfederal funding options for these types of projects will help increase the ease of implementation in a shorter time frame as well as keep costs lower. Examples include:

- Restriping
- Bike racks and lockers
- Buses already equipped with bicycle racks
- Benches and transit shelters

5.6 Regional Agency Coordination Recommendations

5.6.1 Application Process

To receive federal highway and transit funds within the ARTS region, a project must first be submitted for inclusion in the ARTS Transportation Improvement Program (TIP). This program covers a three-year period for the Georgia portion of the study area and a five-year period for the South Carolina portion and is updated annually. The application process for local jurisdictions includes a project submittal sheet, completed by local governments, and the following information for each TIP project: description, estimated total cost, amount of federal funds allocated each program year, proposed sources of funding, and responsible implementing agencies. The application process provides an opportunity to gather data regarding existing facilities and bicycle and pedestrian programs, and the necessary criteria to evaluate bicycle and pedestrian projects as they relate to the ARTS Regional Bicycle and Pedestrian Plan.

5.6.2 Steering Committee

Providing a forum for quarterly Regional Bicycle and Pedestrian Steering Committee meetings that are open to the public can prove instrumental in promoting bicycle and pedestrian usage, education, and safety, and facilitate the development of regional projects. The Regional Bicycle and Pedestrian Steering Committee provided invaluable guidance during the development of this plan. It is recommended that the MPO facilitate continued meetings of this group to guide implementation through the analysis of performance measures, implementation of recommended programs, and

assistance in the selection of projects for inclusion in the Transportation Improvement Program. Current members include:

- Aiken Bicycle Club
- Aiken Parks and Recreation Department
- Aiken Running Club
- Augusta Canal Authority
- Augusta Greenspace Commission
- Augusta-Richmond County Public Works
- Augusta-Richmond County Recreation Department
- Augusta Running Club
- ARTS Citizen Advisory Committee
- Fort Gordon
- Columbia County Public Works
- Columbia County Recreation Department
- Georgia DOT
- Neighborhood Alliance
- Richmond County Safe Communities Program
- South Carolina DOT
- Transit User
- City of North Augusta
- North Augusta Recreation Department

Guidelines for this committee include:

- Continuously recruit new members with a range of perspectives and abilities.
- Provide members with a description of the committee's role including duties and responsibilities, organization, and relationship with citizens, staff, and the governing body.
- Support this committee by providing training through conferences and educational presentations relevant to bicycle and pedestrian planning and group and advocacy processes, and quarterly meetings.
- Encourage the development of yearly priorities through a work plan.
- Recognize that committee members are volunteers and need appreciation for the contribution of their time and energy.

5.7 Performance Measures

Performance measures provide a mechanism with which to evaluate the effectiveness of the existing bicycle and pedestrian system and the success of the ARTS Regional Bicycle and Pedestrian Plan over the next 20 years. The following performance measures are based on the goals and objectives established for the ARTS Regional Bicycle and Pedestrian Plan update. Using the performance measures as benchmarks, the Bicycle and Pedestrian steering committee can evaluate, on a regular basis, the implementation and progress of the plan.

Goal One: Provide for a bicycle and pedestrian transportation network to serve local, community, and regional needs.

- Performance Measure: Number of bicycle facilities that provide access across jurisdictional boundaries.
- Performance Measure: Number of bus stops accessible via bicycle facilities and/or sidewalks.
- Performance Measure: Percentage of population/employment within 1 mile of a bicycle facility; percentage within .25 mile of a sidewalk.

Goal Two: Promote the viability of walking and biking as a safe and healthy transportation option throughout the region for all potential users.

- Performance Measure: Percentage of jurisdictions that maintain a bicycle and/or pedestrian program.
- Performance Measure: Amount of federal funding for education and marketing programs highlighting the safety and health benefits of bicycling and walking.
- Performance Measure: Number of ARTS Bicycle and Pedestrian Steering Committee meetings per year.

Goal Three: Identify appropriate and adequate funding for the development and maintenance of regional and local bicycle and pedestrian systems.

- Performance Measure: Percentage of federal funding used for bicycle projects/sidewalk projects.
- Performance Measure: Percentage of projects in the TIP that include funding for bicycle/pedestrian facilities.

5.7.1 Data Collection Needs

In order to properly evaluate the performance measures, data will need to be collected and maintained, including a GIS database containing population, employment, bicycle/pedestrian facility locations, jurisdictional boundaries, and transit facilities. Regarding local government activity, a survey should be distributed every year within each jurisdiction requesting information on local bicycle and pedestrian programs.

5.8 Recommendations

This section discusses recommendations and implementation strategies for specific actions to accomplish the goals and objectives of the Bicycle and Pedestrian Plan. Demands on the region's resources are high and funding is often scarce. The MPO and its partners must demonstrate that they are willing to undertake significant implementation measures. Interest from the private sector and nonprofit organizations is also required to ensure long-term success.

The success of this plan is not contingent on any one project or program. Success is dependent, however, on immediate implementation of *some* of the projects or programs.

Key components of success include the following:

- Success is dependent on committed leadership from the public and private sectors. A few individuals that are focused and committed to bicycle and pedestrian projects are critical to successful completion. Elected officials, business or community leaders, or steering committee members may fill these roles.

- Success cannot be vulnerable to the failure of one project. Many projects have to be under way at any given time. The number of projects should represent enough "action" to ensure that there will be continuous success stories to tell, even if one project slows down or fails.

- Success, even minor victories, must be continually broadcast through an ongoing regional communications strategy. This is essentially a public relations effort and involves communicating to the media, special interest groups, stakeholders, residents, the development community, and others that may help with the implementation of the plan. Communicate success as it happens!

- Success is dependent on engaging a wide variety of stakeholders. It is important to get people excited about individual projects that make up the whole process. Any organization or individual that can possibly have an interest in and a desire to play a role in the successful implementation of projects that contribute to the future of the bicycle and pedestrian system should be encouraged to join the steering committee.

5.8.1 Education

- Update the bicycle and pedestrian web page with highlights of the benefits associated with walking and bicycling, including health, fitness, economic, and environmental benefits; maps of existing bicycling facilities; and web page links to local advocacy groups, national bicycling and walking organizations, and local government bicycle and pedestrian activities. The ARTS transportation planner should continuously update this web page with information on new bicycle and pedestrian facilities.

- Contact both the GDOT and SCDOT bicycle and pedestrian coordinators for Share the Road bumper stickers to distribute throughout the region. These bumper stickers can be provided to local bicycle shops, outdoor shops, and local government offices.

- Provide NHTSA, GDOT, and SCDOT safety publications to all schools in the region.

5.8.2 Safety

- Contact the GDOT bicycle and pedestrian coordinator to research the possibility of initiating the SR2S program in Richmond and Columbia counties.
- Contact the SCDOT bicycle and pedestrian coordinator about the possibility of initiating a SR2S pilot program for South Carolina in Aiken County.
- Contact neighborhood associations and educate them on the Pedestrian Road Show.
- Coordinate future safety programs with the Augusta Safe Kids Coalition (i.e. Collaborative Helmet Initiative).

5.8.3 Enforcement

- Educate local police departments about the Pedestrian Sting operation.
- Contact neighborhood associations and educate them on the Neighborhood Pace Car Program.

5.8.4 Design and Maintenance

- Request that local governments use consistent design standards in regional projects.
- Request that local governments submit maintenance plans with all projects requesting federal funding.
- Establish a telephone "hotline" or web page comment section to provide cyclists and pedestrians with the opportunity to suggest improvements. This could later be developed into a "Spot Improvement Program" at the local level.

5.8.5 Multimodal Connections

- Review possible installation of bicycle racks on all transit vehicles.
- Provide pedestrian shelters at heavily used transit stops.

- Allow for the reduction of parking spaces when installing bicycle racks.
- Initiate a program whereby local residents can call and recommend bicycle parking locations on public land.

5.8.6 Land Use Policy

- Request that local governments adopt appropriate goals and objectives in long-range plans that promote safe and increased bicycle and pedestrian use.
- Request that local governments review zoning regulations for methods to promote pedestrian and bicyclist trips with activity and/or town centers.
- Request local jurisdictions adopt a site plan review policy that allows land use planners and transportation engineers to review plans concurrently.
- Request local jurisdictions amend subdivision regulations to include "skinny" street standards and shared driveway requirements.
- Conduct Walkable Communities Workshops in activity and/or town centers.
- Encourage schools to prepare access management plans with state funding.

5.8.7 Funding

- Fund approximately $500,000 to $1 million in federal funding, per year, exclusively for regional bicycle projects.
- Require SCDOT, GDOT, and local governments to incorporate identified regional bicycle projects into planned road improvements.
- Set aside approximately $250,000 in federal funding, per year, exclusively for sidewalk projects.
- Require SCDOT, GDOT, and local governments to consider pedestrian facilities in all road improvements.
- Request that local governments amend local development regulations so that pedestrian and bicycle facilities are required during construction of new development.

5.8.8 Agency Coordination

- Redesign TIP project application form to request bicycle- and pedestrian-related information.
- Support a Bicycle and Pedestrian Steering Committee through staff time and an official resolution.

5.8.9 Evaluation of Network

- Maintain a current GIS database of bicycle and new pedestrian facilities to facilitate data collection needs.
- Evaluate bicycle and pedestrian network based on performance standards provided in plan.

6. Projects

The following tables include descriptions of bicycle projects with project locations, recommended facility type, estimated costs, and recommended funding time frame. Sidewalk projects are not included, however, it is recommended that all road improvement projects include pedestrian facilities whenever feasible. Standalone pedestrian projects should be identified and submitted by the local jurisdictions during the Transportation Improvement Program planning process. Pedestrian facilities should only be submitted for federal funding if they provide school, activity center, or transit connectivity. Projects will then be further evaluated and prioritized by the Regional Bicycle and Pedestrian Steering Committee based on the evaluation criteria worksheet.

6.1 Project Funding Summary

Table 4 provides a summary of the costs by funding year. Total costs do not include costs associated with right-of-way acquisition or bridge construction. Funding years are divided into five-year increments over the next 20 years. Table 5 provides funding costs by jurisdiction.

Table 4. Cost Summary

Funding Year	Costs
2008	$27,628,523
2013	$23,118,666
2018	$14,057,956
2023	$25,795,123
Total	$90,600,268

Table 5. Costs by Jurisdiction

Jurisdiction	Costs
Aiken	$35,980,739
Columbia	$28,645,861
Richmond	$25,828,762
Aiken/Richmond	$103,389
Columbia/Richmond	$41,517
Total	$90,600,268

Table 6. Recommended Bicycle Projects

Recommended Bicycle Projects
Sorted by Jurisdiction

Project Number	Year	Jurisdiction	Location	Description	Facility Type	Linear Feet	Miles	Striping and/or Pavement Costs	Signage Costs	Total Costs+.05	General Notes
City of Aiken/Aiken County											
A7	2013	Aiken	Dupont Dr.	From Rutland to Teague St.	Share the Road	2,582	0.49		$489	$513	
A11	2018	Aiken	Beaufort St.	From Wire Rd. to Park Ave. SW	Urban Bike Lane	5,915	1.12	$768,950	$4,791	$812,428	
A12	2018	Aiken	Rutland Dr.	From SC 19/Edgefield Highway to Wire Rd.	Multiuse	8,486	1.61	$466,730	$4,018	$494,285	Road realignment.
A13	2023	Aiken	Robert Bell Pkwy.	From University Pkwy. to U.S. 1/Jefferson Davis Hwy.	Multiuse	7,874	1.49	$433,070	$3,728	$458,638	
A14	2018	Aiken	Hitchcock Parkway	From U.S. 1/Jefferson Davis Hwy. to Whiskey Rd.	Multiuse	27,654	5.24	$1,520,970	$13,094	$1,610,767	
A15	2013	Aiken	Pine Log Rd.	From Whiskey Rd. to S. Centennial	Multiuse	2,944	0.56	$161,920	$1,394	$171,480	
A16	2018	Aiken	University Parkway	From Medical Park to SC 19/Edgefield Highway	Multiuse	15,889	3.01	$873,895	$7,523	$925,489	
A17	2013	Aiken	Gilbert St.	From Banks Mill St. to Colleton	Share the Road	2,034	0.39		$385	$404	
A18	2013	Aiken	Colleton Ave.	From Chesterfield St. to Gilbert	Share the Road	7,464	1.41		$1,414	$1,484	Part of scenic bike route.
A19	2013	Aiken	Audubon Dr.	From Two Notch to Powderhouse	Share the Road	2,513	0.48		$476	$500	
A20	2013	Aiken	Audubon Dr.	From Powderhouse to Banks Mill	Share the Road	1,729	0.33		$327	$344	

Recommended Bicycle Projects
Sorted by Jurisdiction

Project Number	Year	Jurisdiction	Location	Description	Facility Type	Linear Feet	Miles	Striping and/or Pavement Costs	Signage Costs	Total Costs+.05	General Notes
A25	2023	Aiken	Williamsburg St.	From Park to Colleton Ave.	Share the Road	2,217	0.42		$420	$441	
A26	2013	Aiken	Fairfield St.	From Park Ave to Colleton Ave.	Share the Road	784	0.15		$148	$156	
A27	2018	Aiken	Park Ave.	From Hayne to Palmetto Lane	Urban Bike Lane	2,355	0.45	$306,150	$1,908	$323,460	
A33	2023	Aiken	Gregg Ave.	From Hudson to Trolley Line	Urban Bike Lane	2,702	0.51	$351,260	$2,189	$371,121	
A34	2023	Aiken	Hudson Rd.	From Gregg Ave. to Medical Park Dr.	Urban Bike Lane	1,740	0.33	$226,200	$1,409	$238,990	
A35	2018	Aiken	Medical Park Dr.	From Hudson Rd. to University Pkwy.	Urban Bike Lane	2,336	0.44	$303,680	$1,892	$320,851	
A36	2018	Aiken	Boardman	From Whiskey to Two Notch Rd.	Share the Road	2,710	0.51		$513	$539	
A37	2013	Aiken	Two Notch Rd.	From Audubon to Price	Share the Road	4,093	0.78		$775	$814	
A44	2023	Aiken	University Parkway	From SC 19 to Medical Park Dr.	Urban Bike Lane	2,491	0.47	$323,830	$2,018	$342,140	
A45	2023	Aiken	Whiskey Rd.	From Eastgate Drive to E. Pine Log	Urban Bike Lane	7,575	1.43	$984,750	$6,136	$1,040,430	
A46	2023	Aiken	Silver Bluff Rd.	From Whiskey Rd. to Howlandville Rd.	Urban Bike Lane	16,169	3.06	$2,101,970	$13,097	$2,220,820	
A47	2023	Aiken	Dougherty Rd.	From Silver Bluff to Whiskey Rd.	Urban Bike Lane	4,743	0.90	$616,590	$3,842	$651,453	
A48	2013	Aiken	Two Notch Rd.	From Price Ave. to Pine Log Rd.	Share the Road	2,093	0.40		$396	$416	
A49	2008	Aiken	Price Ave.	From Two Notch Rd. to Whiskey Rd.	Share the Road	1,356	0.26		$257	$270	

Recommended Bicycle Projects
Sorted by Jurisdiction

Project Number	Year	Jurisdiction	Location	Description	Facility Type	Linear Feet	Miles	Striping and/or Pavement Costs	Signage Costs	Total Costs+.05	General Notes
A50	2023	Aiken	Teague St.	From Rutland to Columbia St.	Rural Bike Lane	3,261	0.62	$375,015	$500	$394,291	
A51	2018	Aiken	Chesterfield St.	From Teague to Whiskey Road	Share the Road	6,480	1.23		$1,227	$1,289	
A53	2023	Aiken	Vaucluse Rd.	From Richland to Trolley Line	Urban Bike Lane	5,393	1.02	$701,090	$4,368	$740,731	
A55	2023	Aiken	Hayne Ave.	From Dibble to Park	Restriping	3,366	0.64	$2,693	$2,726	$5,690	
A56	2018	Aiken	South Aiken Lane	From Corporate Pkwy. to E. Pine Log Rd.	Share the Road	2,000	0.38		$379	$398	
A57	2023	Aiken	Corporate Parkway	From Whiskey Rd. to Centennial Ave.	Restriping	2,132	0.40	$1,706	$1,727	$3,604	
A58	2023	Aiken	Centennial Ave.	From Corporate Parkway to Pine Log Rd.	Urban Bike Lane	2,115	0.40	$274,950	$1,713	$290,496	
A59	2023	Aiken	Banks Mill Rd.	From Gilbert St. to Pine Log Rd.	Urban Bike Lane	4,811	0.91	$625,430	$3,897	$660,793	
A75	2018	Aiken	Whiskey Rd.	From Chesterfield to Pine Log Rd.	Urban Bike Lane	12,363	2.34	$1,607,190	$10,014	$1,698,064	
A76	2023	Aiken	Dibble Road	From Robert M. Bell Parkway to Hayne Ave.	Urban Bike Lane	14,627	2.77	$1,901,510	$11,848	$2,009,026	
A77	2023	Aiken	Waterloo Street	From Hayne to Trolley Line	Urban Bike Lane	721	0.14	$93,730	$584	$99,030	
A78	2023	Aiken	Whitney Drive	From Dibble Road to Whiskey Road	Multiuse	18,126	3.43	$996,930	$8,582	$1,055,788	
A79	2023	Aiken	Old Airport Road	From Park to East Pine Log Road	Share the Road	4,008	0.76		$759	$797	
A80	2023	Aiken	Pine Log Rd.	From Silver Bluff to Howlandville Road	Urban Bike Lane	16,380	3.10	$2,129,400	$13,268	$2,249,801	

Recommended Bicycle Projects
Sorted by Jurisdiction

Project Number	Year	Jurisdiction	Location	Description	Facility Type	Linear Feet	Miles	Striping and/or Pavement Costs	Signage Costs	Total Costs+.05	General Notes
AB1	2023	Aiken	Richardson Lake Rd.	From Pine Log to Silver Bluff	Share the Road	15,206	2.88		$2,880	$3,024	
AB2	2023	Aiken	Augusta Road	From U.S. 1 to Hitchcock Parkway	Urban Bike Lane	25,940	4.91	$3,372,200	$21,011	$3,562,872	
AB3	2013	Aiken	Hampton (Trolley Line)	From Gregg to Vaucluse	Share the Road	2,281	0.43		$432	$454	
AB4	2008	Aiken	Park Ave. SE	From Union to Under Construction Facility	Share the Road	30,096	5.70		$5,700	$5,985	
North Augusta											
A1	2008	N. Augusta	Martintown Rd.	From U.S. 1 to Georgia Ave.	Restriping	8,724	1.65	$6,979	$7,066	$14,748	
A2	2008	N. Augusta	Buena Vista Ave.	From Atomic Rd. to Riverview Park Dr.	Urban Bike Lane	11,815	2.24	$1,535,950	$9,570	$1,622,796	
A3	2023	N. Augusta	West Avenue	From Martintown Rd. to Greeneway Trail	Urban Bike Lane	7,278	1.38	$949,520	$5,895	$1,003,186	
A4	2018	N. Augusta	Riverview Park Dr./ Manly Dr.	From Buena Vista to Woodlawn Ave.	Multi-Use	4,783	0.91	$263,065	$2,265	$278,596	Currently a sidewalk project.
A5	2013	N. Augusta	Woodlawn Ave.	From West Ave. to Amhurst to Martintown Rd.	Share the Road	7,997	1.51		$1,515	$1,590	
A6	2008	N. Augusta	13th/Riverside Blvd.	From Ellis Street to Greeneway	Restriping	4,078	0.77	$3,262	$3,303	$6,894	North Augusta may be receiving funds to construct an independent multi-use bridge over the Savannah River. If funding is available, this project should be amended to include connections to the bridge. See Project A111
A62	2018	N. Augusta	Georgia Avenue	From Martintown Rd. to Five Notch Rd.	Share the Road	7,153	1.35		$1,355	$1,422	

Recommended Bicycle Projects
Sorted by Jurisdiction

Project Number	Year	Jurisdiction	Location	Description	Facility Type	Linear Feet	Miles	Striping and/or Pavement Costs	Signage Costs	Total Costs+.05	General Notes
A63	2013	N. Augusta	Five Notch Rd.	From Georgia Ave. to Walnut Lane	Urban Bike Lane	19,212	3.64	$2,500,160	$15,562	$2,641,508	
A64	2023	N. Augusta	Walnut Lane	From Five Notch Road to U.S. 25	Share the Road	5,878	1.11		$1,113	$1,169	
A68	2023	N. Augusta	Old Edgefield Rd.	From Knox Ave. to Buena Vista	Share the Road	10,402	1.97		$1,970	$2,069	
A72	2018	N. Augusta	Greeneway Phase 5	Riverfront to Greeneway and to Georgia Avenue	Multiuse	7,104	1.35	$390,720	$3,364	$413,788	
A73	2018	N. Augusta	Greeneway Phase 6	From Clubhouse to U.S. 1	Multiuse	3,047	0.58	$167,585	$1,443	$177,479	
A74	2023	N. Augusta	Greeneway Phase 7	From U.S. 1 to proposed bridge	Multiuse	10256	1.94	$564,080	$4,856	$597,383	Connects to proposed multiuse bridge (see Project A115)
A85	2008	N. Augusta	Martintown Rd.	From Georgia Ave. to Greeneway	Share the Road	7,338	1.39		$1,390	$1,459	
A86	2008	N. Augusta	Martintown Rd.	From Greeneway to Bergen Rd.	Share the Road	10,884	2.06		$2,061	$2,164	
A87	2008	N. Augusta	Martintown Rd.	From Bergen Rd. to Delaughter Dr.	Share the Road	12,681	2.40		$2,402	$2,522	
A88	2008	N. Augusta	Proposed Greeneway Trail	From Walnut Ln. to Greeneway Trail	Multiuse	5,336	1.01	$293,480	$2,527	$310,807	
A89	2008	N. Augusta	Proposed Greeneway Trail	From Exit 5 to Five Notch Rd.	Multiuse	13,954	2.64	$767,470	$6,607	$812,781	
A90	2008	N. Augusta	I-520 Greeneway Trail	Exit 5 to Atomic Rd.	Multiuse	26,145	4.95	$1,437,975	$12,379	$1,522,872	
A91	2008	N. Augusta	Carolina Springs Rd.	From I-520 to Edgefield Rd.	Share the Road	10,184	1.93		$1,929	$2,025	
A92	2008	N. Augusta	Walnut Subdivision	Walnut Lane Loop	Multiuse	5,080	0.96	$279,400	$2,405	$295,896	
A93	2008	N. Augusta	Delaughter Dr.	From Martintown Rd. to Savannah River Dam	Multiuse	8,828	1.67	$485,540	$4,180	$514,206	Connects to proposed multiuse bridge (see Project A112).

Recommended Bicycle Projects
Sorted by Jurisdiction

Project Number	Year	Jurisdiction	Location	Description	Facility Type	Linear Feet	Miles	Striping and/or Pavement Costs	Signage Costs	Total Costs+.05	General Notes
A94	2008	N. Augusta	Gregory Lake Rd.	From Martintown Rd. to Oak Creek Loop	Share the Road	5,126	0.97		$971	$1,019	
A95	2008	N. Augusta	Bergen Rd.	Five Notch Rd. to Martintown Rd.	Multiuse	12,032	2.28	$661,760	$5,697	$700,830	
A96	2008	N. Augusta	Proposed Greeneway Connector	From Greeneway Phase 3 to Bergen Rd.	Multiuse	4520	0.86	$248,600	$2,140	$263,277	
A97	2008	N. Augusta	Proposed Greeneway Extension	From Greeneway Phase 3 to Five Notch Rd.	Multiuse	450	0.09	$24,750	$213	$26,211	
A98	2008	N. Augusta	Proposed Greeneway Extension	From Jackson Ave. to Pine Grove Ave.	Multiuse	1,183	0.22	$65,065	$560	$68,906	
A99	2008	N. Augusta	Proposed Greeneway Extension	From Martintown Rd. to Buena Vista Ave.	Multiuse	4,669	0.88	$256,795	$2,211	$271,956	
A100	2008	N. Augusta	Proposed Greeneway Extension	From Jackson Ave. to Greeneway Phase I	Multiuse	3,490	0.66	$191,950	$1,652	$203,283	
A101	2008	N. Augusta	Georgia Ave.	From Martintown Rd. to Buena Vista Ave.	Share the Road	4,032	0.76		$764	$802	
A102	2008	N. Augusta	Greenway Trail	From Greeneway Phase I to Welcome Center	Multiuse	9,249	1.75	$508,695	$4,379	$538,728	
A103	2008	N. Augusta	Plantation Dr.	From Martintown Rd. to Greeneway Trail	Share the Road	4,448	0.84		$842	$885	
A104	2008	N. Augusta	Old Aiken Rd.	From I-520 to U.S. 1	Share the Road	8,756	1.66		$1,658	$1,741	
A105	2008	N. Augusta	Proposed Greeneway	From Greeneway Phase 6 to Train Bridge	Multiuse	1,836	0.35	$100,980	$869	$106,942	

Recommended Bicycle Projects
Sorted by Jurisdiction

Project Number	Year	Jurisdiction	Location	Description	Facility Type	Linear Feet	Miles	Striping and/or Pavement Costs	Signage Costs	Total Costs+.05	General Notes
A106	2008	N. Augusta	Hampton Ave.	From Martintown Rd. to Hampton End	Share the Road	1,368	0.26		$259	$272	
A107	2008	N. Augusta	Proposed Greeneway Trail	From Hampton Ave. to Bunting Ave.	Multiuse	2,354	0.45	$129,470	$1,115	$137,114	
A108	2008	N. Augusta	Proposed Greeneway Trail	From Fieldcrest Dr. to Trail	Multiuse	229	0.04	$12,595	$108	$13,339	
A109	2008	N. Augusta	Proposed Greeneway Trail	From Greeneway Phase 2 to Cascade Dr.	Multiuse	721	0.14	$39,655	$341	$41,996	
A110	2008	N. Augusta	Proposed Greeneway Trail	From Bergen Rd. to Gregory Lake Rd.	Multiuse	10,399	1.97	$571,945	$4,924	$605,712	
A111	2008	N. Augusta	Savannah River	13th Street	Multiuse/ Bridge	1084	0.21	TBD	$513	TBD	First priority for North Augusta
A112	2023	N. Augusta	Savannah River	Savannah River Dam	Multiuse/ Bridge	2032	0.38	TBD	$962	TBD	Second priority for North Augusta
A113	2023	N. Augusta	Savannah River	From Greeneway Phase 1 to Augusta Canal Towpath	Multiuse/ Bridge	3206	0.61	TBD	$1,518	TBD	Third priority for North Augusta
A114	2023	N. Augusta	Savannah River	Parallel to 5th Street	Multiuse/ Bridge	1025	0.19	TBD	$485	TBD	Fourth priority for North Augusta
A115	2023	N. Augusta	Savannah River	Parallel to I-520	Multiuse/ Bridge	1128	0.21	TBD	$534	TBD	Fifth priority for North Augusta
Columbia County											
C1	2013	Columbia	Columbia Road	From Belair Road to Lewiston	Rural Bike Lane	18,790	3.56	$2,160,850	$2,883	$2,271,919	

Recommended Bicycle Projects
Sorted by Jurisdiction

Project Number	Year	Jurisdiction	Location	Description	Facility Type	Linear Feet	Miles	Striping and/or Pavement Costs	Signage Costs	Total Costs+.05	General Notes
C2	2008	Columbia	Ronald Reagan Drive	From Washington Road to N. Belair Road	Urban Bike Lane	2,131	0.40	$277,030	$1,726	$292,694	To be included in possible turn lane project.
C3	2013	Columbia	Cox Rd./Gibbs Rd.	From Washington Road to Hereford Farm Rd.	Urban Bike Lane	7,450	1.41	$968,500	$6,035	$1,023,261	Narrow, winding road.
C4	2013	Columbia	Wrightsboro Rd.	From S. Belair Rd. to Study Area Boundary	Share the Road	33,730	6.39		$6,388	$6,708	
C5	2018	Columbia	Columbia Rd./SR 232	From Hereford Farm Rd. to Study Area Boundary	Share the Road	35,965	6.81		$6,812	$7,152	
C7	2018	Columbia	Belair Rd./SR 383	From Washington Rd. To Wrightsboro Road	Restriping	25,403	4.81	$20,322	$20,576	$42,944	Schedule restriping in conjunction with intersection improvements.
C8	2013	Columbia	William Few Parkway	From Columbia Rd. To Washington Rd.	Rural Bike Lane	27,826	5.27	$3,199,990	$4,269	$3,364,472	
C10	2008	Columbia	Old Petersburg Rd./CR 145	From Washington Road/Old Evans to Riverwatch Pkwy.	Urban Bike Lane	12,985	2.46	$1,688,050	$10,518	$1,783,496	In process of restriping; add bike lanes; part of Riverwatch Parkway extension, in GDOT plans.
C11	2008	Columbia	Washington Rd./Old Evans Rd./CR 176	From Belair Road to Old Petersburg Road	Urban Bike Lane	6,496	1.23	$844,480	$5,262	$892,229	Proposed widening.
C12	2013	Columbia	Baston Road	From Old Petersburg Road to Furys Ferry Rd.	Restriping	3,873	0.73	$3,098	$3,137	$6,547	
C13	2008	Columbia	N. Belair Rd./CR 580	From Washington Rd. To Fury's Ferry Rd.	Restriping	13,078	2.48	$10,462	$10,593	$22,108	Current roadway realignment project in design.

Recommended Bicycle Projects
Sorted by Jurisdiction

Project Number	Year	Jurisdiction	Location	Description	Facility Type	Linear Feet	Miles	Striping and/or Pavement Costs	Signage Costs	Total Costs+.05	General Notes
C14	2008	Columbia	Hardy McManus Rd.	From Washington Rd. To Fury's Ferry Rd. (includes the future William Few Parkway extension)	Rural Bike Lane	20,272	3.84	$2,331,280	$3,110	$2,451,109	RR crossing; park and school.
C16	2018	Columbia	Flowing Wells Rd.	From Columbia Rd. To Wheeler Rd.	Urban Bike Lane	7,408	1.40	$963,040	$6,000	$1,017,493	
C17	2018	Columbia	Wheeler Road	From S. Belair Road to Flowing Wells Road	Share the Road	7,290	1.38		$1,381	$1,450	
C18	2018	Columbia	Washington Rd./SR 104: Phase III	From Study Area Boundary to Cumberland Drive	Rural Bike Lane	14,866	2.82	$1,709,590	$2,281	$1,797,464	
C19	2008	Columbia	Washington Rd./SR 104: Phase II	From Cumberland Drive to Silver Lake Drive	Rural Bike Lane	12,936	2.45	$1,487,640	$1,985	$1,564,106	
C20	2008	Columbia	Washington Rd./SR 104: Phase I	From Silver Lake Drive to Ronald Reagan	Rural Bike Lane	10,402	1.97	$1,196,230	$1,596	$1,257,717	
C21	2013	Columbia	SR 388/Lewiston Road	From Wrightsboro Rd. to Columbia Rd.	Rural Bike Lane	29,884	5.66	$3,436,660	$4,584	$3,613,307	Truck traffic.
C22	2008	Columbia	Hereford Farm Road	From Columbia to Belair Rd.	Rural Bike Lane	19,586	3.71	$2,252,390	$3,005	$2,368,164	Truck traffic.
C23	2008	Columbia	Evans-To-Locks Rd: Phase II	From existing facility to Blue Ridge Dr.	Multiuse	7,119	1.35	$391,545	$3,371	$414,662	Already funded, contract ready to let.
C24	2008	Columbia	Evans-To-Locks Rd: Phase III	From Blue Ridge Drive to Belair Rd.	Multiuse	7,647	1.45	$420,585	$3,621	$445,416	Design underway.

Recommended Bicycle Projects
Sorted by Jurisdiction

Project Number	Year	Jurisdiction	Location	Description	Facility Type	Linear Feet	Miles	Striping and/or Pavement Costs	Signage Costs	Total Costs+.05	General Notes
C25	2018	Columbia	Furys Ferry Rd./CR 92: Phase II	From Hardy McManus to Blackstone Camp Rd.	Urban Bike Lane	12,069	2.29	$1,568,970	$9,776	$1,657,683	In process of widening from Riverwatch to Baston: add bike lanes.
C26	2018	Columbia	Furys Ferry Rd./CR 92: Phase III	From Hardy McManus to County Line/Study Area Boundary	Rural Bike Lane	6,959	1.32	$800,285	$1,068	$841,420	In process of widening from Riverwatch to Baston: add bike lanes.
C27	2018	Columbia	Columbia Rd	From Belair Rd. to Flowing Wells Rd.	Urban Bike Lane	10,938	2.07	$1,421,940	$8,860	$1,502,340	
CR1	2013	Columbia/ Richmond	Pleasant Home Rd./CR 177	From Flowing Wells To Washington Rd.	Restriping	16,534	3.13	$13,227	$13,393	$27,951	
CR2	2008	Columbia/ Richmond	Walton Way Extension/Davis	From Skinner Mill To Washington Rd.	Restriping	8,025	1.52	$6,420	$6,500	$13,566	Bike lane/Partial road Project.

Recommended Bicycle Projects
Sorted by Jurisdiction

Project Number	Year	Jurisdiction	Location	Description	Facility Type	Linear Feet	Miles	Striping and/or Pavement Costs	Signage Costs	Total Costs+.05	General Notes
Augusta Richmond											
R1	2008	Richmond	Tobacco Rd.	From Karleen To Doug Barnard Pkwy.	Restriping	43,133	8.17	$34,506	$34,938	$72,916	Potential problem with traffic volumes, ditches and pavement width.
R3	2008	Richmond	Levee Rd.	From Sand Bar Ferry Road To Lovers Lane	Multiuse	18,090	3.43	$994,950	$8,565	$1,053,691	Signage costs would have to overcome breaks in the levee and a connection at SR 28.
R4	2008	Richmond	Ellis Street	From Milledge to Crawford to Broad to 15th Street	Share the Road	8,437	1.60	1,096,810	6,834	1,158,826	
R5	2008	Richmond	Milledge Rd.	From bridge at Augusta Canal Levee to Central Ave.	Share the Road	12,383	2.35		$2,345	$2,463	Potential problems with traffic volume, pavement width, on-street parking, sight distance.
R7	2013	Richmond	Highland Ave.	From Damascus Rd. To Gordon Hwy.	Share the Road	2,151	0.41		$407	$428	Potential problems with traffic volume, pavement width, on-street parking, sight distance.
R8	2018	Richmond	Wheeless Rd./Ruby Dr.	From Gordon Hwy. To Richmond Hill Rd.	Restriping	13,014	2.46	$10,411	$10,541	$22,000	Potential problem with traffic volumes, ditches and pavement width.
R9	2018	Richmond	Richmond Hill Rd.	From Ruby Dr. to Lumpkin Road	Share the Road	785	0.15		$149	$156	Potential problems with traffic volume, pavement width, on-street parking, sight distance. Narrow, two-lane road. Heavy vehicle traffic at signalized Lumpkin intersection. Project included in Capital Work Program (unfunded).
R10	2018	Richmond	Lumpkin Rd.	From Richmond Hill Rd. To Mike Padgett Hwy.	Share the Road	7,888	1.49		$1,494	$1,569	

Recommended Bicycle Projects
Sorted by Jurisdiction

Project Number	Year	Jurisdiction	Location	Description	Facility Type	Linear Feet	Miles	Striping and/or Pavement Costs	Signage Costs	Total Costs+.05	General Notes
R11	2008	Richmond	Jackson Rd./Walton Way Extension	From Skinner Mill To Wrightsboro Rd.	Restriping	9,598	1.82	$7,678	$7,774	$16,225	Potential problem with traffic volumes and pavement width.
R13	2008	Richmond	Central Ave.	From 15th St. To Highland Ave.	Share the Road	11,824	2.24		$2,239	$2,351	
R14	2013	Richmond	15th Street	From MLK Jr. Blvd. to Harper St.	Urban Bike Lane	8,821	1.67	$1,146,730	$7,145	$1,211,569	Busy corridor. Project should be coordinated with GDOT widening project.
R15	2008	Richmond	MLK Jr. Blvd./Twiggs	From Olive Rd. to James Brown Blvd. to Greene St.	Restriping	15,987	3.03	$12,790	$12,949	$27,026	Right-of-way narrows. Potential problem with traffic volumes and pavement width.
R16	2018	Richmond	Heard Ave./Olive Rd.	From Central Ave. To Gordon Hwy.	Share the Road	12,599	2.39		$2,386	$2,505	Narrow two-lane road.
R17	2023	Richmond	Old Savannah Hwy./Mike Padgett Hwy.	From Gordon Hwy. to Study Area Boundary	Rural Bike Lane	49,015	9.28	$5,636,725	$7,519	$5,926,457	Numerous driveways. Current GDOT project at I-520 does not include bike lanes.
R18	2013	Richmond	Windsor Spring Rd.	Old Louisville Rd. @ SR 56 To SR 88	Rural Bike Lane	52,722	9.99	$6,063,030	$8,088	$6,374,674	Partial road project.
R20	2023	Richmond	Wheeler Rd.	From Flowing Wells Rd. To Bransford Rd.	Share the Road	23,985	4.54		$4,543	$4,770	
R21	2023	Richmond	Willis Foreman Rd.	From Peach Orchard Rd (U.S. 25) to Lace Rd.	Share the Road	22,292	4.22		$4,222	$4,433	Potential problem with traffic volumes. Road widening project included in CWP (unfunded).
R22	2008	Richmond	Lace Rd./Ulm Rd./Karleen Rd.	From Tobacco Rd. To Willis Foreman Rd.	Share the Road	13,998	2.65		$2,651	$2,784	
R23	2008	Richmond	Wrightsboro Rd.	From Jimmie Dyess Pkwy. To North Leg Rd.	Urban Bike Lane	20,530	3.89	$2,668,900	$16,629	$2,819,806	Existing project from Jimmie Dyess to Augusta West Parkway includes bike lanes. Existing project from Augusta West Parkway to Marks Church will include bike lanes. Heavy truck volumes between

Recommended Bicycle Projects
Sorted by Jurisdiction

Project Number	Year	Jurisdiction	Location	Description	Facility Type	Linear Feet	Miles	Striping and/or Pavement Costs	Signage Costs	Total Costs+.05	General Notes
											Barton Chapel and North Leg.
R25	2008	Richmond	Levee Rd.	From Lovers Lane To Lock & Dam Rd.	Multiuse	12,772	2.42	$702,460	$6,047	$743,933	Dirt road; Bridge closed to car traffic.
R26	2008	Richmond	Lock & Dam Rd.	From Lock & Dam Park To Doug Barnard Pkwy.	Multiuse	12,565	2.38	$691,075	$5,949	$731,876	Dirt road.
R27	2023	Richmond	Doug Barnard Pkwy.	From Lock & Dam Rd. To Tobacco Rd.	Rural Bike Lane	6,696	1.27	$770,040	$1,027	$809,621	No future road project planned.
R28	2008	Richmond	(SR 28) Sand Bar Ferry Rd.	From East Boundary to Savannah River	Restriping	15,211	2.88	$12,169	$12,321	$25,714	
R29	2008	Richmond	Broad Street	From 14th Street to 5th Street	Share the Road	6,286	1.19		$1,191	$1,250	Potential problems with traffic volume and sight distances.
R30	2013	Richmond	Damascus Rd./Wrightsboro Rd./Magnolia Dr./Comfort Rd./Park Ave./ Buena Vista Rd./Lombardy Ct./Peachtree St./Henry St.	From Highland Ave. to Bransford Rd.	Share the Road	16,734	3.17		$3,169	$3,328	
R31	2013	Richmond	Bransford Rd.	From Henry St. to Wheeler Rd.	Share the Road	2,007	0.38		$380	$399	
R32	2013	Richmond	Cardinal Dr./Central Ave.	From Magnolia Dr. to Highland Ave.	Share the Road	4,637	0.88		$878	$922	
R33	2013	Richmond	Harper St.	15th St. to St. Sebastian Way	Share the Road	1,912	0.36		$362	$380	Busy two-lane road within medical complex.

Recommended Bicycle Projects
Sorted by Jurisdiction

Project Number	Year	Jurisdiction	Location	Description	Facility Type	Linear Feet	Miles	Striping and/or Pavement Costs	Signage Costs	Total Costs+.05	General Notes
R34	2013	Richmond	St. Sebastian Way	From Harper St. to Reynolds St.	Share the Road	4,381	0.83		$830	$871	Partial road project. New location of St. Sebastion includes bike lanes.
R35	2008	Richmond	Fenwick St.	From 13th Street to 8th St.	Share the Road	3,234	0.61		$613	$643	Contract Awarded
R36	2013	Richmond	Butler Creek Greenway	From Lock and Dam Rd. to Deans Bridge Rd. (U.S. 1)	Multiuse	41,034	7.77	$2,256,870	$19,429	$2,390,114	
R37	2023	Richmond	Furys Ferry/Warren	From Riverwatch Parkway to Skinner Mill Rd.	Share the Road	7,905	1.50		$1,497	$1,572	
R38	2013	Richmond	Stanley Dr./Heath Dr./Wicklow Dr./Berckmans Rd.	From Washington Rd. to Raes Creek	Share the Road	6,360	1.20		$1,205	$1,265	
R39	2023	Richmond	Rae's Creek/Crane Creek	From Berckmans Rd. to Skinner Mill Rd.	Multiuse	12,323	2.33	$677,765	$5,835	$717,780	
R40	2008	Richmond	Alexander Dr.	From Washington Rd. to Georgia Power Easement near Riverwatch Parkway	Urban Bike Lane	3,947	0.75	$513,110	$3,197	$542,122	Road project under design includes bike lanes.
R41	2023	Richmond	Georgia Power Easement	From Alexander Dr. to Eisenhower Park	Multiuse	5,609	1.06	$308,495	$2,656	$326,708	Project will Bridge Rock Creek at point opposite Warren Lake
R42	2013	Richmond	Crane Ferry Rd.	From Pleasant Home Rd. to Warren Rd.	Share the Road	4,464	0.85		$845	$888	
R43	2008	Richmond	Joy/Boy Scout Rd.	From Wheeler Rd. to Rae's Creek	Share the Road	6,074	1.15		$1,150	$1,208	
R44	2008	Richmond	Monte Sano Ave. /Henry St./ Cumming Rd.	From Bransford to Milledge	Share the Road	10,236	1.94		$1,939	$2,036	

Recommended Bicycle Projects
Sorted by Jurisdiction

Project Number	Year	Jurisdiction	Location	Description	Facility Type	Linear Feet	Miles	Striping and/or Pavement Costs	Signage Costs	Total Costs+.05	General Notes
R45	2008	Richmond	8th Street	From Fenwick to D'Antignac (Dyess Park)	Share the Road	1,015	0.19		$192	$202	Part of Augusta Canal Multi-Use Trail, Phase II; Contract Awarded Dec. 2002
R46	2008	Richmond	11th Street	From Fenwick to Telfair; Telfair from 11th to 10th; 10th from Telfair to Riverwalk	Share the Road	3,866	0.73		$732	$769	Part of Augusta Canal Multi-Use Trail, Phase II; Contract Awarded Dec. 2003
R47	2018	Richmond	Flowing Wells	From Wrightsboro Rd. to Frontage Rd. to Wheeler Rd.	Share the Road	7,717	1.46		$1,462	$1,535	
R48	2018	Richmond/ Aiken	5th Street and Savannah River	Conversion of existing bridge over Savannah River to bike/ped only	Multiuse	1,775	0.34	$97,625	$840	$103,389	Separate bridge for bike/ped; motorists from River North will not be able to travel into Augusta. This project may be deleted if new bridge is constructed (see Project A114)
R49	2008	Richmond	Bellevue Ave.	From Arsenal Ave. to Peachtree Rd.	Share the Road	2,951	0.56		$559	$587	
R50	2008	Richmond	Wrightsboro Road	From Damascus Rd. to ASU Athletic Complex Entrance	Share the Road	2,385	0.45		$452	$474	
R51	2008	Richmond	Savannah River Levee	From Gordon Hwy. to Sandbar Ferry Rd.	Multiuse	14,087	2.67	$774,785	$2,668	$816,326	

Recommended Bicycle Projects
Sorted by Jurisdiction

Project Number	Year	Jurisdiction	Location	Description	Facility Type	Linear Feet	Miles	Striping and/or Pavement Costs	Signage Costs	Total Costs+.05	General Notes
R52	2008	Richmond	Greene Street	From 10th St to James Brown to Ellis to E. Boundary	Share the Road	7,996	1.51		1514	$1,590	